A Guide to
School Safety and Health

Bobby R. Davis
Series Editor

N.C. Department of Labor
Division of Occupational Safety and Health
1101 Mail Service Center
Raleigh, NC 27699-1101

Cherie K. Berry
Commissioner of Labor

N.C. Department of Labor
Occupational Safety and Health Program

Cherie K. Berry
Commissioner of Labor
OSHA State Plan Designee

Allen McNeely
Deputy Commissioner for Safety and Health

Kevin Beauregard
Assistant Deputy Commissioner for Safety and Health

Acknowledgments

A Guide to School Safety and Health was originally prepared by L.A. Weaver Company, Raleigh, N.C. This edition was revised and updated July 2004, incorporating material from several information sources, including extracts from OR-OSHA publication 2034 (8/2003), *Hazard Communication: A Safe Work Practice Guide;* some information printed by Council of State Science Supervisors (CSSS) in *Science and Safety, Making the Connection;* Department of Health and Human Services Centers for Disease Control and Prevention (CDC) Office of Health and Safety—Lab Safety, ***Basic Chemical Safety*** (Web site: http://www.cdc.gov/od/ohs/safety/basicchem.htm). The CSSS document is a published guide for science safety, found at their Web site (http://csss.enc.org), to provide a handy, concise reference for science teachers to address 10 of the most commonly asked questions of concerns about classroom safety.

This guide is intended to be consistent with all existing OSHA standards; therefore, if an area is considered by the reader to be inconsistent with a standard, then the OSHA standard should be followed.

To obtain additional copies of this book, or if you have questions about N.C. occupational safety and health standards or rules, please contact:

N.C. Department of Labor
Bureau of Education, Training and Technical Assistance
1101 Mail Service Center
Raleigh, NC 27699-1101

Phone: (919) 807-2875 or 1-800-NC-LABOR (1-800-625-2267)

Additional sources of information are listed on the inside back cover of this book.

The projected cost of the OSHNC program for federal fiscal year 2004–2005 is $13,330,705. Federal funding provides approximately 38 percent ($5,162,000) of this total.
Printed 2/05

Contents

Part		Page
	Foreword	v
1	Chemical Management and Laboratory Safety	1
	Information About This Part	1
	Chemical Management	2
	Laboratory Safety	6
2	Fire Hazards	10
	Information About This Part	10
	Safe Use and Storage of Flammable and Combustible Liquids	11
3	Hazards in Automobile and Woodworking Shops	26
	Information About This Part	26
	Automobile Shops	26
	Woodworking Shops	27
	General Requirements for Operating Equipment Safety	29
	Appendix A	
	Physical Characteristics and Response Guidelines for Selected Flammable/Combustible Liquids	30
	Appendix B	
	Basic Components of 29 CFR 1910.1450: Occupational Exposure to Hazardous Chemicals in Laboratories	35
	Other Sources of Help	36

Foreword

All protections of the Occupational Safety and Health Act of North Carolina extend fully to employees within public school systems. Conversely, school systems must comply with applicable occupational safety and health standards. *A Guide to School Safety and Health* can be viewed as a primer regarding hazards in three broad areas within schools: laboratories, fires, and automobile and woodworking shops. The guide seeks to heighten awareness of some of the most prominent hazards in those areas and to inform the reader of several key safety and health standards. It should make our public schools safer.

In North Carolina, state inspectors enforce the federal laws through a state plan approved by the U.S. Department of Labor. The N.C. Department of Labor is charged with this mission. NCDOL enforces all current OSHA standards. It offers many educational programs to the public and produces publications, including this guide, to help inform people about their rights and responsibilities.

As you look through this guide, please remember NCDOL's mission is greater than just enforcement. An equally important goal is to help citizens find ways to create safe workplaces. Everyone profits from working together for safety. Reading and understanding *A Guide to School Safety and Health* will help you form effective occupational safety and health practices in your work.

Cherie K. Berry
Commissioner of Labor

1

Chemical Management and Laboratory Safety

Science education programs provide ample opportunity for students to perform laboratory and "hands-on" activities. Safety should be an integral part of any science program. The National Safety Council reports that about 32,000 school-related accidents occur each school year. About 5,000 of these accidents are science-related.

Information About This Part

Observing information in this part can reduce both the number and severity of injuries. However, this section covers the basics. This industry guide now includes information from two science guides published by Council of State Science Supervisors. *Science and Safety, Making the Connection* is a guide for science teachers in grades 9 through 12. *Science and Safety: It's Elementary* is a guide for elementary school teachers. Both guides are available in print versions and as downloadable PDFs on the CSSS Web site: http://csss.enc.org.

Most information in this part was originally extracted (with permission) from *Safety First in Science Teaching,* a publication of the Division of Science within the N.C. Department of Public Instruction. *Safety First in Science Teaching* is a resource that no school science teacher should be without. It goes far beyond the scope of this publication. It covers laboratory safety, but also extends to science activities (such as field trips and radiation hazards). It includes an extensive bibliography, and it is interspersed with valuable leads to public and private agencies upon which the teacher can draw.

Principals and teachers should also become familiar with applicable occupational safety and health laws. These laws do not apply to students, but they do apply to teachers and other school employees. Occupational safety and health standards are enforced by the Division of Occupational Safety and Health of the N.C. Department of Labor. The standards are enforced under the Occupational Safety and Health Act of North Carolina (OSHNC).

OSHNC standards cover many subjects, such as eyewash and safety shower facilities and various types of personal protective equipment. Two OSHNC standards that are particularly applicable to this part are Occupational Exposure to Hazardous Chemicals in Laboratories (29 CFR 1910.1450) (see appendix B of this guide) and the North Carolina Occupational Safety and Health Hazard Communication Standard (13 NCAC 7C.0101(a)(105); 29 CFR 1910.1200). Among other things, these standards require training, information and medical safeguards for all employees who are exposed to hazardous chemicals.

You can obtain copies of these standards and of all *North Carolina Occupational Safety and Health Standards for General Industry* through the Bureau of Education, Training and Technical Assistance, Division of Occupational Safety and Health, N.C. Department of Labor (see the inside back cover of this publication for the address and telephone number).

The Essence of Hazard Communication

The essence of hazard communication is a warning. We use thousands of chemical products throughout our lives, at home and at work. But most of us would be hard-pressed to distinguish safe products from hazardous ones without a warning—the familiar skull-and-crossbones, for example. The warning tells us the product is hazardous, that it can harm us if we use it improperly.

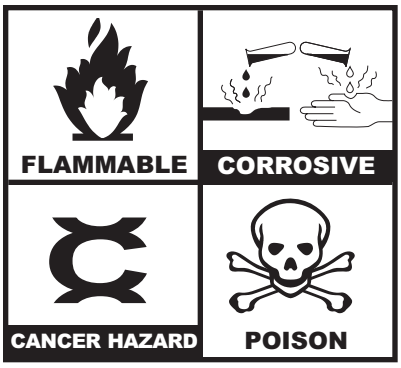

Hazard Communication in the Workplace

In the workplace, hazard communication ensures that workers who may be exposed to hazardous chemicals know about the chemicals' hazards and understand how to protect themselves from exposure.

Hazard communication warns us that a chemical product is hazardous and tells us how the product can harm us if we use it improperly.

What Is a Hazardous Chemical?

OSHA's Definition of a Hazardous Chemical

OSHA's hazard-communication standard, 1910.1200, defines a hazardous chemical as "any element, chemical compound, or mixture that is a physical hazard or a health hazard."

Chemicals That Are Physical Hazards

Chemicals that are physical hazards are unstable and, when handled improperly, can cause fires or explosions. A chemical that is a physical hazard has one of the following characteristics:

- It's a combustible liquid.
- It's a compressed gas.
- It's explosive.
- It's flammable.
- It's water-reactive.
- It starts or promotes combustion in other materials.
- It can ignite spontaneously in air.

Chemicals That Are Health Hazards

Chemicals that are health hazards can damage an exposed person's tissue, vital organs or internal systems. Generally, the higher the chemical's toxicity, the lower the amount or dose necessary for it to have harmful effects. The effects vary from person to person, ranging from temporary discomfort to permanent damage, depending on the dose, the toxicity and the duration of exposure to the chemical. Health effects range from short-duration symptoms that often appear immediately (acute effects) to persistent symptoms that usually appear after longer exposures (chronic effects). Health effects can be classified by how they affect tissue, vital organs or internal systems:

- Agents that damage the lungs, skin, eyes or mucous membranes.
- Carcinogens cause cancer.
- Corrosives damage living tissue.
- Hematopoietic agents affect the blood system.
- Hepatotoxins cause liver damage.
- Irritants cause inflammation of living tissue.
- Nephrotoxins damage cells or tissues of the kidneys.
- Neurotoxins damage tissues of the nervous system.
- Reproductive toxins damage reproductive systems, endocrine systems or a developing fetus.
- Sensitizers cause allergic reactions.

Chemical Management

Sound chemical management is an essential element of the science program. New laws and regulations reflect increasing public concern for protecting our health and environment from the ill effects of chemicals. Many chemicals used in instructional programs are known or suspected carcinogens (capable of causing cancer), neoplastics (capable of producing noncancerous tumors) and teratogens (capable of causing birth defects). Some chemicals are highly toxic or may cause severe allergic reactions. Others are capable of causing bodily injury by their explosive or combustible nature.

School personnel and students must be well informed about chemical management. Adequate safety equipment and chemical reference materials are essential parts of such management. Safety knowledge put into practice can greatly reduce the frequency and severity of injuries.

A *minimal* chemical management program will include an inventory of all chemicals, identification of chemicals, proper storage and disposal.

What Should a Chemical Hygiene Checklist for School Science Labs Include?

Most states and the Occupational Safety and Health Administration (OSHA) require work environments, including schools, to have a safety plan that reduces risks and ensures a safe workplace for employees (OSHA Laboratory Standard—29 CFR 1910.1450). This is referred to as the Chemical Hygiene Plan (CHP) and includes policies, procedures and responsibilities designed to develop an awareness of potentially harmful chemicals in the workplace. It is important that laboratory chemicals be used only with knowledge of possible risks involved and within acceptable limits of exposure. The CHP must stress that everyone in the school has the right to know what hazards he or she will be exposed to and is responsible for implementing safety procedures and policies. The CHP should be reviewed at least annually and revised as needed. Since care and supervision of the science room are primarily the responsibilities of the classroom teacher, the CHP should serve as a guide to safe science instruction. Teacher responsibilities may include:

- Development of a statement that includes clearly defined responsibilities of the superintendent, principals, department chairs, classroom teachers, students and parents.
- Inclusion of a laboratory safety program as part of the curriculum and instruction.
- Regular training for all staff on safety policies, recordkeeping and other procedures.
- Evaluation of laboratory facilities and procurement of equipment needed.
- Development and enforcement of a plan for monitoring safety equipment and storage areas.
- Preparation and storage of safety records, i.e., inventories, material safety data sheets (MSDS), accident/incident reports, hazard notification reports.
- Identification of hazardous chemicals and minimizing exposure to students and teachers, e.g., computerized/written inventory.
- Development of safety policies and procedures for procurement, distribution, storage and disposal of chemicals, e.g., using MSDS file.
- Development of a written emergency plan and practiced procedures for spills or accidents involving chemicals.
- Implementation of a plan for posting signs and labels.

Inventory

Compiling an accurate chemical inventory is the first step in chemical management. The chemical inventory should contain the following information:

- School name, address, telephone number
- Name of person(s) compiling the inventory
- Date of inventory
- Alphabetical listing of all chemicals
- Amount of each chemical
- Storage location (room number)
- Storage category (based on chemical compatibilities and denoting which chemicals to avoid storing together)
- Hazardous class information
- Date each chemical was purchased

Identification

Vendors or manufacturers must provide a *material safety data sheet* (MSDS) for each chemical. Each chemical must be labeled.

The MSDS contains important information on the chemical. Every manufacturer of chemicals does not follow the same MSDS format, but every MSDS must contain particular information. This information includes:

- Identity: chemical name, manufacturer's name and address
- Hazardous ingredients: hazardous components, exposure limits
- Physical/chemical characteristics: boiling/melting point, specific gravity, etc.

- Fire and explosion hazard data: flashpoint, flammable limits
- Reactivity data: concerns for reactivity
- Health hazard data: routes of entry, acute/chronic exposure, emergency/first aid procedures
- Safe handling and use: correct handling, storing procedures
- Control measures: personal protective equipment, hygiene practices prior to breaks, meals and departing from chemical handling areas

Each chemical container must be properly *labeled.* The label should provide accurate information, including the chemical name, purchase date, manufacturer or supplier, and health and physical hazards. Some labels may also include storing or handling procedures, personal protective equipment, and other general safety instructions.

How Should I Label and Store Chemicals?

A material safety data sheet (MSDS) should be kept on file and be easily accessible for ALL chemicals. MSDS sheets should be referenced for proper storage and for appropriate personal protective equipment (PPE). Refer to your school district and state policies for local storage requirements and mandates.

Labeling Chemicals

Include the following minimum essential information on chemical labels:

- Chemical manufacturer or supplier (including address and telephone number)
- Chemical name and/or trade name of the product (same as MSDS when applicable)
- Date received or date placed in the container
- Strength of the chemical
- Precautions to be observed in handling or mixing the chemical
- Appropriate hazard symbol National Fire Protection Association (NFPA) rating

Flammable

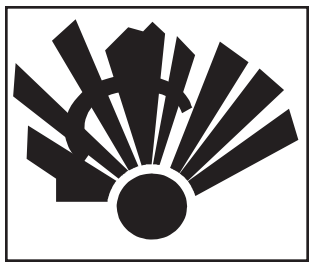

Explosive

Oxidizer

Toxic
Poison

Reactive to
Water

Carcinogen

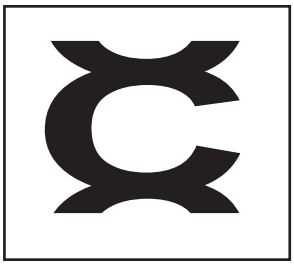

Corrosive

Chemical Storage

Store chemicals according to the following minimum storage requirements:

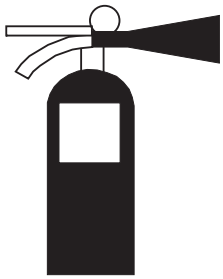

- Separate the storage area from the classroom area. Use appropriate warning symbols to mark storage areas.
- Make certain that the storage area is properly ventilated.
- Make certain that fire door or adequate exits are provided.
- Provide appropriate fire extinguishers or extinguishing systems.
- Make certain that storage shelves are securely attached to wall (each shelf with a front lip 1 inch high to prevent bottles from sliding off shelves).
- Separate inorganic chemicals from organic chemicals.
- Use a reputable guide, e.g., National Institute for Occupational Safety and Health/Occupational Safety and Health Administration (NIOSH/OSHA), to help you properly separate incompatible chemical families.
- Do not store chemicals past the manufacturer's suggested shelf life.
- Make certain that chemicals are labeled and stored in appropriate containers.
- Store flammables and corrosives separately in appropriate cabinets.
- Compressed gas cylinders must be stored such that cylinders containing flammable gases are adequately separated from any oxygen cylinders that may be stored in that area.
- All gas cylinders must be secured against falling over and must be stored away from heat sources.
- All chemicals must be adequately labeled and stored alphabetically according to compatibility types. Traditional alphabetical storage is UNSAFE.
- Open flame, smoking or any other type of heat must not be permitted in the chemical storage area.
- Electrical equipment and outlets in the storage area must be well grounded (as required, approved for hazardous locations as applicable).

Disposal

The Environmental Protection Agency and the American Chemical Society list the following possible disposal methods:

- Sanitary landfills
- Hazardous waste landfills
- Sewer system (regulations differ for different locations)
- Thermal treatment (incineration)
- Recycling or reuse
- Chemical, physical or biological treatments, including neutralization, oxidation, precipitation and solidification

For safe disposal of materials, consult the appropriate MSDS sheet. If an MSDS is not available, request one from the manufacturer; it may also be possible to obtain one online at http://www.msdsonline.com. Disposing of wastes in landfills is not environmentally recommended; reducing wastes, recycling and destruction are preferable. If you are not sure if a waste is hazardous, contact a local/state hazardous waste management agency or your state or regional EPA office, fire marshal's office or state department of education.

Safety First in Science Teaching (1988) recommends, by priority, three methods of disposing of chemicals. The methods are prioritized because of the high cost of disposal through commercial waste management concerns.

The first recommended option is to contact the Southeast Waste Exchange, the Urban Institute, the University of North Carolina at Charlotte, UNCC Station, Charlotte, NC 28223; (704) 597-2307. The Southeast Waste Exchange acts as a referral service and maybe able to recommend a source which will accept your waste chemicals and possibly even pay for them, depending on the chemical.

The second recommended option is in-house treatment and disposal by a qualified chemistry teacher. The teacher should be guided by a recognized source, such as the *Guide for Safety in the Chemical Laboratory* (Van Nostrand Rienhold Company, New York, NY, 1983).

The third recommended option is to employ the services of a commercial hazardous waste transporter. A complete list of firms that provide hazardous waste services in North Carolina is available from the Hazardous Waste Section of the Department of Environment, Health, and Natural Resources; (919) 733-2178.

Laboratory Safety

Established safety procedures are essential for an effective laboratory safety program. The safety procedures must be understood and practiced by all if accidents are to be minimized. The following lists include information regarding major areas in laboratory safety. You can use them as checklists.

First Aid and Emergency Tips

- All students and teachers must know the location of fire extinguishers, eyewash fountains, safety showers, fire blankets and first aid kits.
- Prominent signs must identify the location of safety equipment.
- Student aides must be fully aware of potential hazards and know how to report accidents promptly.
- Emergency instructions concerning fire, explosions, chemical reactions, spillage and first aid procedures must be posted noticeably near all chemical storage areas.
- Emergency phone numbers must be displayed.
- Material safety data sheets must be readily available for all chemicals in the laboratory.

General Science/Laboratory Safety—Rules and Suggested Guidelines

- Never tolerate horseplay or practical jokes of any kind.
- Never eat or drink in the laboratory or from laboratory equipment.
- Be especially sensitive to odors or fumes. Use a wafting motion of the hand to distinguish odors.
- Have appropriate protective equipment, e.g., American National Standards Institute (ANSI) Z87 or Z87.1 coded goggles, chemical aprons, non-allergenic gloves, dust masks, eyewash, shower(s), ABC fire extinguisher(s), sand bucket(s), fire blanket(s), in easily accessible locations. (General rule is accessibility within 15 seconds or 30 steps from any location in the room.)
- Make certain that instructor and students wear adequate protective equipment, including especially safety goggles and aprons, when experiments involving hazardous chemicals or procedures are conducted.
- Never use mouth suction in filling pipettes with chemical reagents. (Use a suction bulb.)
- Use heat-safety items such as safety tongs, heat-resistant mittens, aprons, gloves.
- Respect experiments for potential hazards.
- Make good housekeeping the rule in maintaining safe laboratory conditions.
- Confine long hair and loose clothing.
- Use only equipment in good condition (not broken) and efficient working order.
- Have separate disposal containers for broken glassware or flammables.
- Never conduct experiments alone in the laboratory.
- Discuss and post emergency/escape and notification plans/numbers in each room/laboratory. Clearly mark fire exits, and keep exits (preferably two from laboratories) unobstructed.
- Identify medical and allergy problems for each student to foresee potential hazards.

- Model, post and enforce all safety procedures. Display safety posters.
- Keep laboratory uncluttered and locked when not in use or when a teacher is not present.
- Know district and state policies concerning administering first aid and have an adequately stocked first-aid kit accessible at all times.
- Make certain all hot plates, open burners, and heat source equipment are turned off when leaving the laboratory.
- Inspect the laboratory on a frequent, scheduled basis.
- Know and follow district and state policies/guidelines for use of hazardous chemicals, live animals, and animal and plant specimens in the classroom/laboratory.
- Report all injuries, including animal scratches, bites, and allergic reactions, immediately to appropriate supervisors.
- Keep records on safety training and laboratory incidents.
- Have master cut-off switches/valves within each laboratory (preferably in one secure location); know how to use them; and keep water, gas and electricity turned off when not in use. (Lockout/tagout (LOTO) procedures as applicable).
- Maintain up-to-date chemical and equipment inventories, including material safety data sheet (MSDS) files.
- Label equipment and chemicals adequately with respect to hazards and other needed information.
- Post the National Fire Protection Association (NFPA) "diamond" at all chemical storeroom entrances denoting the most hazardous chemical in each category within. Regularly, as needed, send an updated copy of the inventory to the local fire department.
- Clean all work surfaces in the chemical or biological laboratory thoroughly after each use.
- Never dispose of chemicals by pouring them down the sink (unless instructed to do so by the appropriate authority).

Physical Safety

- Always use proper protective equipment (for eyes and body) when hammering, chipping or grinding rocks, minerals or metals.
- Never look directly at the sun.
- Never allow the open end of a heated test tube to be pointed toward anyone.
- Do not taste chemicals for identification purposes (or for any other purpose).
- When heating materials in glassware by means of a gas flame, protect the glassware from direct contact with the flame through use of a wire gauze or ceramic-centered wire gauze.
- Do not pour water into acid. PUT THE ACID IN THE WATER! This method reduces the heat generated and minimizes the threat of chemical splashes.
- Remove broken glass from sinks promptly, as it presents a serious hazard.

Electrical Safety

- Understand that the human body is a conductor of electricity.
- Batteries or cells of 1.5 volts or less are safe for classroom use. However, the battery may explode if heated or thrown into an open fire. The chemicals inside of the battery can be dangerous if taken internally or exposed to the skin.
- Keep work areas (including floors and counters) dry.
- Never handle electrical equipment with wet hands or when standing in damp areas.
- Do not use electrical wires with worn insulation.
- Use only three-prong service outlets.
- Make certain that electrical equipment is properly grounded through the use of grounding (three prong) plugs.

Standard Practices

1. **Cardinal Rule:** *Avoid exposure to all chemicals!* Never allow chemicals to come in contact with unprotected skin. Wear protective coats/gowns/aprons, gloves, and eyewear/face shields. Prevent inhalation exposure by using chemical fume hoods or other containment devices for vapors, gases, aerosols, fumes, dusts or powders
2. Eye protection and other appropriate PPE are required for **ALL** personnel and visitors in **ALL** locations where chemicals are used and/or stored.
3. Access to the laboratory is limited or restricted by the lab director when work with hazardous chemicals is in progress.
4. Signs identifying hazards in the laboratory and responsible laboratory personnel are posted on all entrances to the laboratory.
5. All laboratories will be maintained in a neat and orderly fashion.
6. Eating, drinking, smoking, handling contact lenses, applying cosmetics, and food are not permitted in work areas.
7. Mouth pipetting is prohibited.
8. Laboratory coats/gowns/smocks/aprons and protective eyewear are worn while in the laboratory. Additional PPE (specialized gloves, respirators) are worn based on the work being performed.
9. All chemicals are to be stored properly according to recognized compatibilities. Chemicals posing special hazards or risks must be limited to the minimum quantities required to meet short-term needs and stored under appropriately safe conditions (i.e., flammables in flammable storage cabinets). Chemicals are not to be stored on the floor or in chemical fume hoods.
10. A chemical inventory (see ImP2ACT) must be maintained and posted on the door of each lab.
11. Outdated and obsolete chemicals will be disposed via the chemical waste disposal program (ImP2ACT). Ethers and other materials that degrade to unstable compounds must be shelf dated for disposal six months after being opened, but no more than 12 months after purchase, even if unopened, unless processed to prevent dangerous levels of unstable peroxides from forming.
12. Spill control kits are available and laboratorians instructed in their use. All spills are promptly cleaned up and the affected area decontaminated.
13. All chemical wastes are placed in appropriate and properly labeled containers for disposal through the "Hazardous Chemical Waste Disposal Program."
14. Emergency exits and access to emergency equipment (fire extinguishers, emergency eye washes/showers) are kept free of obstructions.
15. Work surfaces are cleaned regularly and kept uncluttered.
16. Compressed gas cylinders are secured at all times.
17. All chemical laboratories must have a chemical hygiene plan specific for that laboratory.

Safety Incident

Laboratorian opens refrigerator door and an unlabeled bottle falls from door and breaks on floor. Volatile chemical immediately fills room with noxious fumes; building is evacuated; no one ID's the bottle.

ImP2ACT—Improved Pollution Prevention Acquired through Chemical Tracking

CDC Chemical Tracking Program—A program that places bar codes on all chemicals and other hazardous materials as they become CDC property, tracks them throughout their use and final disposal and creates a data base with many benefits for CDC laboratorians:

1. **Chemical Sharing**—search the data base for a specific chemical and identify the owner, location, and amount of chemical on hand.
2. **Material Safety Data Sheets (MSDS)**—search the database for a specific chemical and view/print the latest manufacturer specific MSDS for that chemical.
3. **Personal Monitoring**—OHS's Industrial Hygiene Section (Office of Health and Safety) will query the data base for particularly hazardous chemicals and OSHA-regulated carcinogens. Laboratorians found to be working with or

exposed to these chemicals will have a personal monitoring program developed for them. The specific program will be developed based upon the nature of the hazard.

4. **Automated Chemical Inventories**—produce an inventory report of chemicals on hand using various filters, i.e., owner, organization, manufacturer, building, room, date purchased.
5. **Chemical History**—shows the known history of the chemical including date purchased, owner and shelf life. This will help in disposing or recycling of an unwanted or "inherited" chemical before its expiration date. Thus, accumulation of expensive orphaned unknowns can be avoided.

2

Fire Hazards

Fire is the complex process of combustion. This process involves four components: oxygen, fuel, heat and a chemical reaction. The four components are often referred to as the "fire tetrahedron" (see figure 1).

Figure 1

The Fire Tetrahedron

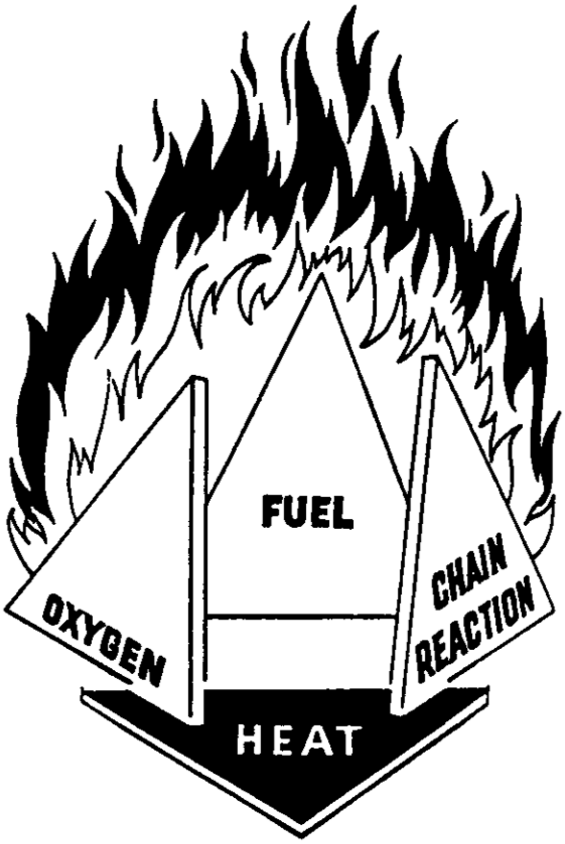

If the essentials of the fire tetrahedron combine, a fire will start. Your school has everything a fire needs:

- Fuel: gas, hydrogen generated during battery charging operations, packing and cleaning materials, paint and solvents, sealing compounds, plastic, trash
- Oxygen: liquid oxygen, air
- Ignition sources: flames, sparks, heat, hot metal, spontaneous combustion, electrical sources

The prevention of fires and the protection of individuals from the hazards of fire require, as a minimum, attention to the following areas: the safe use and storage of flammable and combustible liquids, fire extinguishers, and fire exits.

Information About This Part

This part offers valuable but basic information about fire prevention and protection. More help is available. The school principal and teachers will also want to become familiar with *North Carolina Occupational Safety and Health Standards for General Industry,* Subpart E—Means of Egress and Subpart L—Fire Protection. The standards are enforced in the public sector.

You can obtain a copy of the standards through the Bureau of Education, Training and Technical Assistance, Division of Occupational Safety and Health, N.C. Department of Labor (see the inside back cover of this publication for the address and telephone number).

Safe Use and Storage of Flammable and Combustible Liquids

Flammable and combustible liquids are of particular concern in the prevention of and protection against fire. By definition, a flammable liquid has a flashpoint below 100°F, and a combustible liquid has a flashpoint at or above 100°F. A flashpoint is the minimum temperature at which a liquid gives off enough vapor to form an ignitable mixture with air near the surface of the vessel. Thus, if the ambient or surrounding temperature is greater than the flashpoint, the flammable liquid is giving off enough vapor to ignite if exposed to an ignition source.

Flammable and combustible liquids are widely used in the manufacture of many products including paints, varnishes, lacquers, textiles, rubber, waxes, furniture and plastics. Flammable and combustible liquids, such as gasoline, kerosene, toluene, turpentine, varsol and fuel oil, are in common use.

Some solvents, such as methyl or ethyl alcohol, are not only flammable, but also burn with a nearly invisible flame if ignited. Persons using these liquids need to be made aware of this fact.

Classes of Flammable Materials

Any substance that can burn is considered **combustible**. This includes common materials found in the lab, which are not often thought of as a hazard, such as paper towels, stacks of journals and notebooks, as well as chemicals that are stored. Efforts must be exerted to avoid situations where these items might become involved in or contribute to a fire.

Though you must keep in mind the hazards posed by combustible materials, when present the real threat of fire lies with **flammable** materials. These are substances that are more likely to burn and will ignite more rapidly. Most flammable materials found in a laboratory setting will be in a liquid state, though there are numerous solids that must be used cautiously in areas where ignition sources exist.

The Department of Transportation is responsible for determining what constitutes a flammable material, and has offered the following definitions for ignitable materials:

Combustible Liquid—Any liquid having a flash point above 100°F and below 200°F

Flammable Liquid—Any liquid having a flash point below 100°F

Flammable Gas—A compressed gas that satisfies the criteria for flame projection, lower flammability limit and flammability range

Flammable Solid—A non-explosive material that is capable of producing fire as a result of friction, heat retained from production or which, if ignited, produces a serious transportation hazard.

These definitions are based on the flammability characteristics of the material, specifically the flash point.

FLASH POINT *is the minimum temperature at which a liquid gives off vapor in sufficient concentrations to allow the substance to ignite.*

The National Fire Protection Association has further broken flammable and combustible materials into storage categories based on the flash point of the material. The result is that ignitable materials are subdivided into three categories of flammable materials and two categories of combustible materials.

Classification	Term	Flash Point and Boiling Point	Examples
Class IA	Flammable	Below 73°F; Boils below 100°F	ethyl ether, acetaldehdye, methyl formate, pentane
Class IB	Flammable	Below 73°F; Boils above 100°F	acetone, benzene, carbon disulfide, ethanol, toluene
Class IC	Flammable	Above 73°F; Boils below 100°F	xylene, butyl alcohol, amyl acetate
Class II	Combustible	At or above 100°F	glacial acetic acid, formaldehyde, hydrazine
Class IIIA	Combustible	At or above 140°F	naphthalene, octyl alcohol
Class IIIB	Combustible	At or above 200°F	glycerine, propylene glycol

Basic Chemical Safety

The typical chemical laboratory contains a wide range of potentially hazardous substances that may be reactive, toxic, flammable, carcinogenic or radioactive. These substances may produce acute or chronic effects. It is therefore imperative that laboratorians (person in charge of lab) always adopt a practice of avoiding all chemical exposures. If the chemical exposure cannot be eliminated, then it should be kept as low as reasonably possible. In general, laboratorians should adopt the following Golden Rules:

1. Plan ahead

- Have the proper equipment and PPE to handle chemicals safely.
- Substitute less toxic chemicals whenever possible.
- Purchase the minimum quantities possible.
- Determine potential hazards beforehand.
- Have a safety plan for emergencies.

2. Do not underestimate the risks

- Read chemical labels and MSDS beforehand.

3. Minimize exposure

- Use the smallest quantities of chemicals possible.
- Never smell chemicals/compounds of unknown toxicity.
- Use fume hoods or other ventilation devices.
- Use carrying containers.
- Do not eat or drink in the lab.

4. Be prepared for accidents

- Know the location of eye washes, showers, fire extinguishers and exits.
- Be prepared to provide basic first aid.
- Anticipate the actions of others.
- Remove all jewelry and "snugup" all loose fitting clothing and ties.

Biosafety Level (BSL)

The recommended biosafety level(s) for the organisms represent those conditions under which the agent ordinarily can be safely handled. The laboratory director is specifically and primarily responsible for assessing the risks and appropriately applying the recommended biosafety levels. When specific information is available to suggest that virulence, pathogenicity, antibiotic resistance patterns, vaccine and treatment availability, or other factors are significantly altered, more (or less) stringent practices may be specified.

BSL1—work with agents not known to cause disease in healthy adults; "standard microbiological practices (SMP)" apply; no safety equipment required; sinks required.

BSL2—work with agents associated with human disease; SMP apply plus limited access, biohazard signs, sharps precautions and biosafety manual required; biological safety cabinets (BSC) used for aerosol/splash generating operations; lab coats, gloves, face protection required; contaminated waste is autoclaved.

BSL3—work with indigenous/exotic agents that may have serious or lethal consequences and with potential for aerosol transmission; BSL2 practices plus controlled access; decontamination of all waste and lab clothing before laundering; determination of baseline serums; BSC used for all specimen manipulations; respiratory protection used as needed; physical separation from access corridors; double door access; negative airflow into lab; exhaust air not recirculated.

BSL4—work with dangerous/exotic agents of life threatening nature or unknown risk of transmission; BSL3 practices plus clothing change before entering lab; shower required for exit; all materials are decontaminated on exit; positive pressure personnel suit required for entry; separated/isolated building; dedicated air supply/exhaust and decon systems.

Each of the four biosafety levels (BSLs) consists of combinations of laboratory practices and techniques, safety equipment, and laboratory facilities. Each combination is specifically appropriate for the operations performed, the documented or suspected routes of transmission of the infectious agents, and the laboratory function or activity. However, common to all four biosafety levels are the "Standard Practices," which remain the same from BSL1 to BSL4.

Source: http://www.cdc.gov/od/ohs/biosfty/bmbl4/bmbl4s3.htm

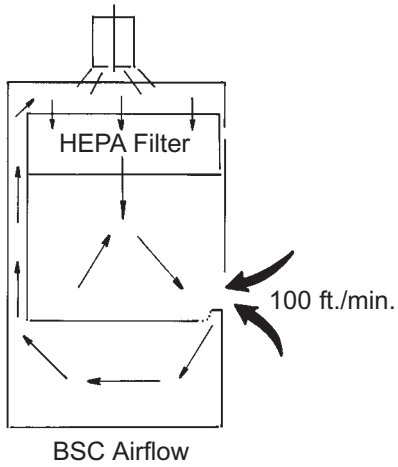

H—high
E—efficiency
P—particulate
A—air

Biological Safety Cabinets (BSC)

Properly maintained BSCs, when used in conjunction with good microbiological techniques, provide an effective containment system for safe manipulation of moderate and high-risk microorganisms (Biosafety Level 2 and 3 agents). Both Class I and II BSCs have inward face velocities (75–100 linear feet per minute) that provide comparable levels of containment to protect laboratory workers and the immediate environment from infectious aerosols generated within the cabinet. Class II BSCs also protect the research material itself through high-efficiency particulate air filtration (HEPA filtration) of the air flow down across the work surface (vertical laminar flow). Class III cabinets offer the maximum protection to laboratory personnel, the community and the environment because all hazardous materials are contained in a totally enclosed, ventilated cabinet.

General Safety Practices

The accidental mixing of solvents must be avoided. The addition of a solvent with a low flashpoint to a relatively less volatile solvent can produce a mixture quite hazardous because the low flashpoint solvent can make the mixture more subject to ignition. Smoking, fire and spark discharges in the vicinity of solvents must be strictly forbidden and prevented.

Possible sources of static electricity should also be recognized. Examples of several situations that can generate static electricity are shown in figure 2. Note that splash filling can cause the separation of charges, which will produce a spark when the potential difference is great enough. This is why many precautions have to be taken before and during the transfer of flammable or combustible liquids from one container to another, especially when large amounts are involved.

Figure 2

Typical Static-Producing Situations Including Charge Separation in Pipe

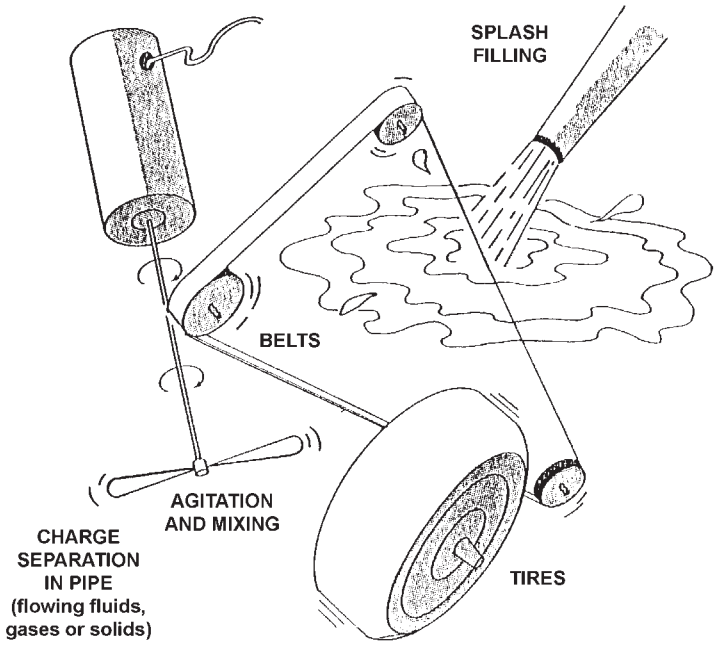

A spark occurs between two bodies with different charges when there is NOT a good path for electrical conduction between them. Therefore, bonding and grounding of flammable liquid containers are necessary to prevent static electricity from causing a spark. Bonding eliminates a difference of potential for electricity between objects. There is no voltage between two conductive objects that are bonded together (see figure 3). Grounding eliminates a difference of potential between the object and ground. The bonding and grounding connections must be made securely.

Figure 3

Bonding

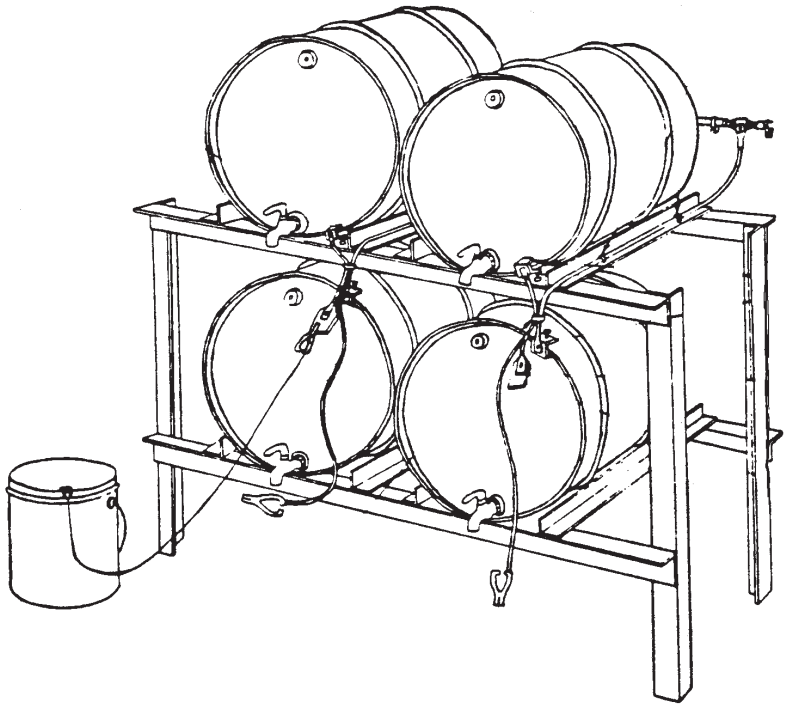

For the storage of relatively small amounts of flammable and combustible liquids, only containers and portable tanks approved for such use maybe used. Such storage containers and tanks should not limit the use of exits or stairways. They should not be stored close to sources of heat or the rays of the sun.

When you are working with flammable liquids in the laboratory:

- Have a CO_2 or multipurpose fire extinguisher available.
- Work in a well-ventilated area with at least six complete air exchanges per hour.
- Keep the liquid over a pan or container but not over a sink.
- Use no flames or high-temperature heating devices.
- Do not store flammable or combustible liquids in or around a home-refrigerator. Vapors inside or outside the refrigerator may be ignited by sparks produced in the electrical switching system.
- Only use containers approved by UL or other testing laboratories for storing flammables. Make sure containers are labeled.
- Limit the volume used to the smallest amount possible.

See appendix A of this guide for assistance in identifying the physical characteristics and response guidelines for common flammable and combustible liquids.

Identification Systems

National Fire Protection Association 704 System (NFPA 704), What the Diamond Code Means:

The National Fire Protection Association (NFPA) has developed a color-coded system called NFPA 704. The system uses a color coded diamond with four quadrants in which numbers are used in the upper three quadrants to signal the degree of emergency health hazard (blue), fire hazard (red) and reactivity hazard (yellow). The bottom quadrant is used to indicate water reactivity, radioactivity, biohazards or other special hazards. The emergency hazards are signaled on a numerical scale of 0 to 4, with 0 = no unusual hazard, 1 = minor hazard, 2 = moderate hazard, 3 = severe hazard, and 4 = extreme hazard.

Health (Blue)

Health hazards in firefighting generally result from a single exposure, which may vary from a few seconds up to an hour. Only hazards arising out of an inherent property of the material are considered. It should be noted, however, that the physical exertion demanded in firefighting or other emergency conditions tends to intensify the effects of any exposure.

Flammability (Red)

Susceptibility to burning is the basis for assigning risk levels within this category. The method of attacking the fire is influenced by the material's susceptibility factor.

Reactivity/Stability (Yellow)

The assignment of degrees in the reactivity category is based upon the susceptibility of materials to release energy either by themselves or in combination with water. Fire exposure is one of the factors considered, along with conditions of shock and pressure.

Special Information (White)

The quadrant includes information on specific characteristics of the material (e.g., reactivity with water, tendency to oxidize).

This system is used as a quick reference in emergency situations. It should be readily available to assure that effective and fast control may be achieved during fire incidents. The ratings are always represented within a diamond shaped symbol (see figure 4).

The top position of the diamond shaped symbol indicates the flammability rating, the left position indicates the health hazard rating, and the right position indicates the reactivity rating. The colors used to emphasize each category are blue for health, red for flammability, and yellow for reactivity. The bottom of the symbol is a space used for additional information such as for radioactivity or skin hazards. In figure 4, the letter "W" with a line through the center alerts emergency personnel not to use water as an extinguishing agent for this particular chemical and not to allow the chemical to contact water. (See table 1 for further explanation of the rating system used in the symbol in figure 4.)

Figure 4

NFPA Hazard Signal Arrangement

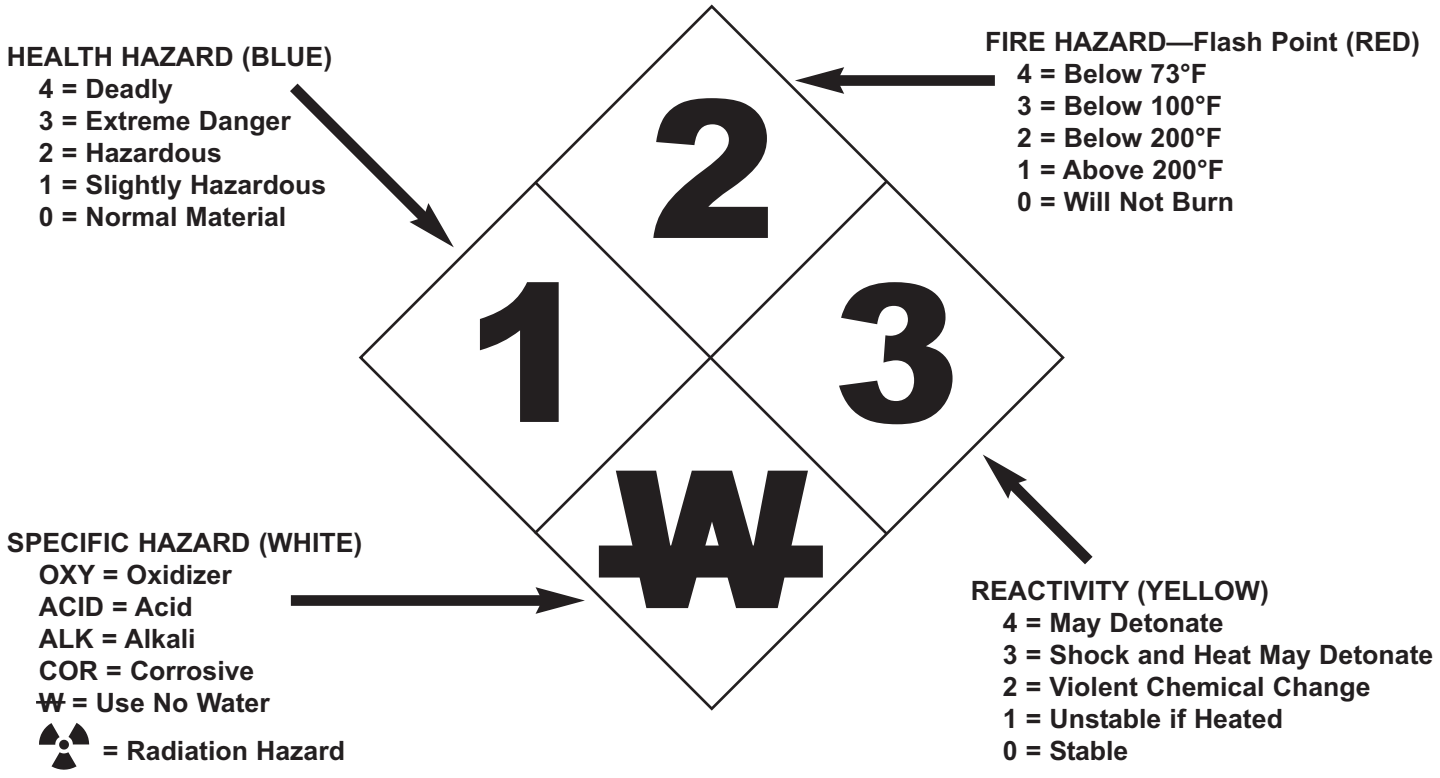

Source: http://departments.und.edu/safety/manual/chemhaz/chem.html

Fire Diamond Symbol designed by the NFPA to give a quick number rating for the particular material's degree of health (blue), flammability (red), reactivity (yellow) and specific (white) hazard.

Using Material Safety Data Sheets

A material safety data sheet contains detailed information about a hazardous chemical product's health effects, physical and chemical characteristics, and safe practices for using it.

Responsibilities of Chemical Manufacturers, Importers and Distributors

Chemical manufacturers and importers must prepare a material safety data sheet for each hazardous chemical product they produce. Distributors are responsible for ensuring that you have a material safety data sheet for each hazardous chemical product they sell to you.

Information Required on Material Safety Data Sheets

Chemical manufacturers and importers must prepare a material safety data sheet for each hazardous chemical product they ship to you. The following information must appear on each sheet.

Required information	Description
Identity of the chemical	Typically, a common chemical name. (The identify of the chemical on a material safety data sheet must match its identity on the container label.)
Physical and chemical characteristics	For example: vapor pressure, flashpoint and solubility.
Physical hazards	For example: potential for fire, explosion, or reaction with water or other chemicals.
Health hazards	For example: signs and symptoms of exposure, and medical conditions that might be aggravated by exposure.
Primary routes of chemical entry	How the chemical enters the body.
Permissible Exposure limit (PEL)	The maximum amount of the chemical that one can be exposed to during an eight-hour work shift.
Carcinogenicity	Based on findings in the National Toxicology Program Annual Report on Carcinogens or the International Agency for Research on Cancer Monographs (latest editions)
Precautions for safe use	How to handle the chemical safely, hygiene and protective practices and clean-up procedures for spills and leaks.
Control measures	The engineering controls, safe work practices and personal protective equipment necessary to control exposure.
Emergency and first aid procedures	How to respond to spills, leaks, contamination and overexposure.
Preparation date	The date the material safety data sheet was prepared or updated.
Name, address and phone number	Who to contact for more information on the chemical's hazards and emergency-response procedures.

Example of a Material Safety Data Sheet for Acetone

Acetone is a colorless liquid with a distinct smell and taste. It evaporates easily, is flammable and dissolves in water. The example on the following pages highlights the minimum information you should see on a material safety data sheet for acetone. A real material safety data sheet will have more information.

An MSDS Example: Acetone

Chemical product and company identification

Item name: ACETONE, ACS
Company name and address: xxxx
Company's emergency phone number: xxxx
Company's information phone number: xxxx
MSDS preparation date: 1/1/03

Hazard characteristic code: F2
Unit of issue container qty: 16 OZ
Type of container: BOTTLE
Net unit weight: 0.8 LBS
CAS #: 67-64-1

Identity of the chemical

Ingredient: ACETONE (SARA III)

OSHA PEL: 1000 PPM

Physical and chemical characteristics

Appearance and odor: COLORLESS LIQUID, MINT-LIKE ODOR.
Boiling point: 133F, 56C
Melting point: –138F, –94C
Vapor pressure (mm hg/70 F): 180 mmhg
Vapor density (Air = 1): 2.0
Specific gravity: 0.7972

Decomposition temperature: UNKNOWN
Evaporation rate: 14.48
Solubility in water: MISCIBLE
Corrosion rate (IPY): UNKNOWN
Auto-ignition temperature: 869F

Physical hazard data

Flash point: 0F, –18C
Flash point method: CC
Lower explosive limit: 2.6
Upper explosive limit: 12.8

Extinguishing media: DRY CHEMICAL, CARBON DIOXIDE, WATER SPRAY, ALCOHOL, FOAM.

Special fire fighting protective clothing: WEAR SELF-CONTAINED BREATHING APPARATUS AND FULL PROTECTIVE CLOTHING. COOL FLAME-EXPOSED CONTAINERS WITH WATER UNTIL WELL AFTER FIRE IS OUT.

Unusual fire and explosive hazards: VAPORS MAY TRAVEL TO SOURCE OF IGNITION AND FLASH BACK. CONTAINER MAY EXPLODE IN HEAT OR FIRE. STAY UPWIND, OUT OF LOW AREAS.

Reactivity

Stability: YES
Conditions to avoid: HEAT, SPARK, FLAME.

Materials to avoid: OXIDIZERS, ACID, HYDROGEN PEROXIDE, CHROMIC ANHYDRIDE, CHOLOROFORM, ACTIVATED CARBON, NITRIC PLUS ACETIC ACID, OLEUM.

Health hazard data

Route of entry—Inhalation: YES
Route of entry—Skin: YES
Route of entry—Ingestion: YES

Health hazards acute and chronic: NARCOTIC AT HIGH CONCENTRATION. INDUSTRY REPORTS NO INJURIOUS EFFECTS OTHER THAN SKIN DEFATTING AND HEADACHE AT PROLONGED INHALATION.

Carcinogenicity—NTP: NO
Carcinogenicity—IARC: NO
Carcinogenicity—OSHA: NO

Explanation carcinogenicity: THIS CHEMICAL IS NOT LISTED BY IARC, NTP, OR OSHA AS A SUSPECTED OR CONFIRMED CARCINOGEN.

Signs/symptoms of overexposure: IRRITATION OF EYES, NOSE AND THROAT; HEADACHE, DIZZINESS,AND DERMATITIS.

Medical conditions aggravated by exposure: SKIN AND RESPIRATORY CONDITIONS.

Emergency/first aid procedures:
EYES, SKIN—IMMEDIATE WATER FLUSH.
INHALATION—REMOVE TO FRESH AIR.
INGESTION—CALL PHYSICIAN! IF CONSCIOUS, INDUCE VOMITING.

Precautions for safe handling and use

Steps if released or spilled: ELIMINATE IGNITION SOURCES. WEAR PROPER PROTECTIVE EQUIPMENT. USE WATER SPRAY TO REDUCE VAPORS. TAKE UP WITH NON-COMBUSTIBLE ABSORBENT MATERIAL AND CONTAINERIZE FOR LATER DISPOSAL.

Waste disposal method: TO BE PERFORMED IN COMPLIANCE WITH ALL CURRENT LOCAL, STATE, AND FEDERAL REGULATIONS.

Precautions-handling/storing: DO NOT GET LIQUID OR VAPOR IN EYES, ON SKIN, ON CLOTHING. AVOID BREATHING VAPOR. KEEP AWAY FROM HEAT, SPARKS, FLAME.

Other precautions: OBSERVE ALL LABEL PRECAUTIONS WHEN HANDLING "EMPTY" CONTAINERS AND POSSIBLE RESIDUE THEREIN.

Control measures

Respiratory protection: ORGANIC CANNISTER MASK OR SUPPLIED AIR, @1000 PPM.
Ventilation: USE ADEQUATE EXPLOSION-PROOF VENTILATION TO CONTROL AIRBORNE CONCENTRATIONS BELOW THE EXPOSURE LIMITS.

Protective gloves: BUTYL RUBBER GLOVES ARE RECOMMENDED
Eye protection: FULL FACE SHIELD, SPLASH GOGGLES
Other protective equipment:
CHEMICAL RESISTANT CLOTHING. EYE WASH STATION AND SAFETY SHOWER.
Work hygienic practices: WORK SAFELY. RESPECT THE MATERIAL. WASH AFTER HANDLING.

Information Resources Available
The National Institute for Occupational Safety and Health (NIOSH) also provides sources of information about various chemicals on its Web site, which features many different types of databases and information resources. For example, the *NIOSH Pocket Guide to Chemical Hazards* (NPG) is a source of general industrial hygiene information on several hundred chemicals/classes for workers, employers and occupational health professionals. The NPG does not contain an analysis of all pertinent data. It presents key information and data in abbreviated or tabular form for chemicals or substance groupings (e.g., cyanides, fluorides, manganese compounds) that are found in the work environment. The information found in the NPG should help users recognize and control occupational chemical hazards. The NPG includes the following information:

- Chemical names, synonyms, trade names, conversion factors, CAS, RTECS and DOT numbers
- NIOSH recommended exposure limits (NIOSH RELs)
- Occupational Safety and Health Administration (OSHA) permissible exposure limits (PELs)
- NIOSH immediate dangerous to life and health values (NIOSH IDLHs) (documentation for those values can be found elsewhere on this Web site)
- A physical description of the agent with chemical and physical properties
- Measurement methods
- Personal protection and sanitation recommendations
- Respirator recommendations
- Information on health hazards, including route, symptoms, first aid and target organ information

Acetone	**CAS** 67-64-1
$(CH_3)_2CO$	**RTECS** AL3150000
Synonyms & Trade Names Dimethyl ketone, Ketone propane, 2-Propanone	**DOT ID & Guide** 1090 127

Exposure Limits	NIOSH REL: TWA 250 ppm (590 mg/m^3)
	OSHA PEL†: TWA 1000 ppm (2400 mg/m^3)
IDLH 2500 ppm [10%LEL] See: 67641	**Conversion** 1 ppm = 2.38 mg/m^3

Physical Description
Colorless liquid with a fragrant, mint-like odor.

MW: 58.1	BP: 133°F	FRZ: –140°F	Sol: Miscible
VP: 180 mmHg	IP: 9.69 eV		Sp.Gr: 0.79
Fl.P: 0°F	UEL: 12.8%	LEL: 2.5%	

Class IB Flammable Liquid: Fl.P. below 73°F and BP at or above 100°F.

Incompatibilities & Reactivities
Oxidizers, acids

Measurement Methods
NIOSH 1300, 3800; OSHA 69
See: NMAM or OSHA Methods

Personal Protection & Sanitation	**First Aid** (See procedures)
Skin: Prevent skin contact Eyes: Prevent eye contact Wash skin: When contaminated Remove: When wet (flammable) Change: No recommendation	Eye: Irrigate immediately Skin: Soap wash immediately Breathing: Respiratory support Swallow: Medical attention immediately

Important additional information about respirator selection
Respirator Recommendations NIOSH
Up to 2500 ppm: (APF = 10) Any chemical cartridge respirator with organic vapor cartridge(s)*/(APF = 25) Any powered, air-purifying respirator with organic vapor cartridge(s)*/(APF = 50) Any air-purifying, full-facepiece respirator (gas mask) with a chin-style, front- or back-mounted organic vapor canister/(APF = 10) Any supplied-air respirator*/(APF = 50) Any self-contained breathing apparatus with a full facepiece
Emergency or planned entry into unknown concentrations or IDLH conditions: (APF = 10,000) Any self-contained breathing apparatus that has a full facepiece and is operated in a pressure-demand or other positive-pressure mode/(APF = 10,000) Any supplied-air respirator that has a full facepiece and is operated in a pressure-demand or other positive-pressure mode in combination with an auxiliary self-contained positive-pressure breathing apparatus
Escape: (APF = 50) Any air-purifying, full-facepiece respirator (gas mask) with a chin-style, front- or back-mounted organic vapor canister/Any appropriate escape-type, self-contained breathing apparatus

Exposure Routes inhalation, ingestion, skin and/or eye contact

Symptoms Irritation eyes, nose, throat; headache, dizziness, central nervous system depression; dermatitis

Target Organs Eyes, skin, respiratory system, central nervous system

See also: INTRODUCTION See ICSC CARD: 0087 See MEDICAL TESTS: 0002

Source: http://www.cdc.gov/niosh/npg/npgd0004.html

Remember the NFPA Diamond

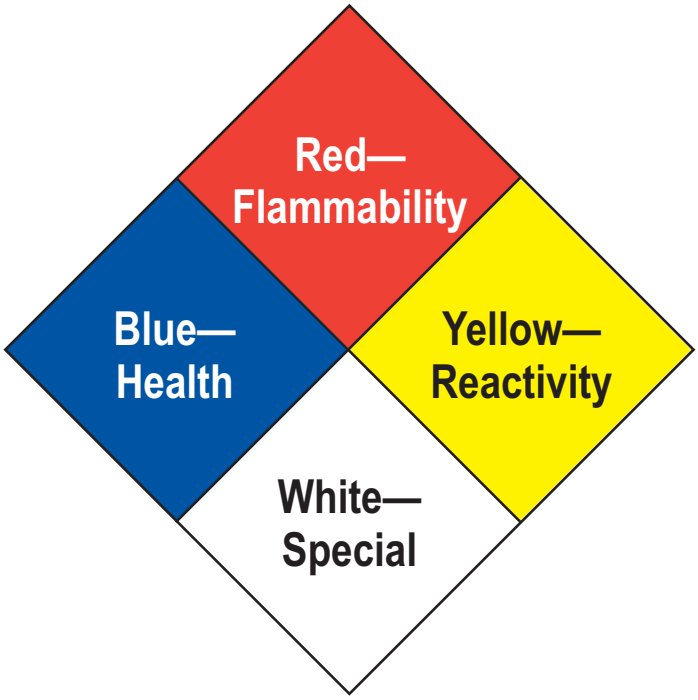

Health (Blue)		
4	Danger	May be fatal on short exposure. Specialized protective equipment required
3	Warning	Corrosive or toxic. Avoid skin contact or inhalation
2	Warning	May be harmful if inhaled or absorbed
1	Caution	May be irritating
0		No unusual hazard
Flammability (Red)		
4	Danger	Flammable gas or extremely flammable liquid
3	Warning	Flammable liquid flash point below 100°F
2	Caution	Combustible liquid flash point of 100° to 200°F
1		Combustible if heated
0		Not combustible
Reactivity (Yellow)		
4	Danger	Explosive material at room temperature
3	Danger	May be explosive if shocked, heated under confinement or mixed with water
2	Warning	Unstable or may react violently if mixed with water
1	Caution	May react if heated or mixed with water but not violently
0	Stable	Not reactive when mixed with water
Special Notice Key (White)		
Acid	pH < 3 pH units	
Alk	pH > 9 pH units	
Corr	Capable of	
Oxy	Oxidizing Agent	
W	Water Reactive	
☢	Radiation Hazard	

Source: http://www.cbl.umces.edu/Resources/SafetyWeb/HazComHandout.html#stability

Table 1

Explanation of the NFPA Hazard Signal Arrangement

Identification of Health Hazard Color Code: **BLUE**		**Identification of Flammability** Color Code: **RED**		**Identification of Reactivity (Stability)** Color Code: **YELLOW**	
Level	**Type of Possible Injury**	**Level**	**Susceptibility of Materials to Burning**	**Level**	**Susceptibility to Release of Energy**
4	Materials too dangerous to human health to expose firefighters. A few whiffs of the vapor could cause death or the vapor or liquid could be fatal on penetrating the fire-fighters normal full protective clothing. The normal full protective clothing and breathing apparatus available to the average fire department will not provide adequate protection against inhalation or skin contact with these materials.	**4**	Very flammable gases or very volatile flammable liquids. Shut off flow and keep cooling water streams on exposed tanks or containers.	**4**	Materials that (in themselves) are readily capable of detonation or of explosive decomposition or reaction at normal temperatures and pressures. Includes materials that are sensitive to mechanical or localized thermal shock. If a chemical with this hazard rating is in an advanced or massive fire, the area should be evacuated.
3	Materials extremely hazardous to health, but areas may be entered with extreme care. Full protective clothing including self-contained breathing apparatus, coat, pants, gloves and boots, with bands around the legs, arms and waist should be provided. No skin surface should be exposed.	**3**	Materials that can be ignited under almost all normal temperature conditions. Water may be ineffective because of the low flash point.	**3**	Materials that (in themselves) are capable of detonation or of explosive decomposition or reaction that require a strong initiating source that must be heated under confinement before initiation. Includes materials that are sensitive to thermal or mechanical shock at elevated temperatures and pressures, or that react explosively with water without requiring heat or confinement. Firefighting should be done from an explosive-resistant location.
2	Materials hazardous to health, but areas may be entered freely with full facemask self-contained breathing apparatus that also provides eye protection.	**2**	Materials that must be moderately heated before ignition will occur. Water spray may be used to extinguish the fire because the material can be cooled below its flash point.	**2**	Materials that (in themselves) are normally unstable and readily undergo violent chemical change, but do not detonate. Includes materials that can undergo chemical change with rapid release of energy at normal temperatures and pressures, or that can undergo violent chemical change at elevated temperatures and pressures. Also includes those materials that may react violently with water or that may form potentially explosive mixtures with water. In advanced or massive fires, firefighting should be done from a safe distance or from a protected location.
1	Materials only slightly hazardous to health. It may be desirable to wear self-contained breathing apparatus.	**1**	Materials that must be preheated before ignition will occur. Water may cause frothing if it gets below the surface of the liquid and turns to steam. However, water fog gently applied to the surface will cause a frothing that will extinguish the fire.	**1**	Materials that (in themselves) are normally stable but that may become unstable at elevated temperatures and pressures or that may react with water with some release of energy, but not violently. Caution must be used in approaching the fire and applying water.
0	Materials that on exposure under fire conditions would offer no hazard beyond that of ordinary combustible materials.	**0**	Materials that will not burn.	**0**	Materials that (in themselves) are normally stable even under fire exposure conditions and that are not reactive with water. Normal firefighting procedures may be used.

Special Notice Key (White)	**Acid** pH < 3 pH units	**Alk** pH > 9 pH units	**Corr** Corrosive	**Oxy** Oxidizing Agent	**W** Water Reactive

Portable Fire Extinguishers

Portable fire extinguishers have been called "first aid fire extinguishers." They contain a limited supply of an extinguishing agent that can be hand carried or moved on wheel carts. They cannot be used as a substitute for fixed firefighting systems, but they can provide an initial attack against fires.

Portable fire extinguishers are suitable for one or more classes of fire, and they should be marked for the fires for which they are suited. Extinguishers and wall markings should be easily read at 3 feet and 25 feet, respectively. (Figure 5 illustrates the accepted symbols for classes of fire extinguishers.)

The NFPA classifies fires as:

Class "A"—Fires in wood, textiles and other ordinary combustibles containing carbonaceous material. This type of fire is extinguished by cooling with water or a solution containing water (loaded stream), which wets down material and prevents glowing embers from rekindling. *A general purpose dry chemical extinguisher is also effective for Class "A," "B" and "C" fires.*

Class "B"—Fires in gasoline, oil, grease, paint or other liquids that gasify when heated. This type of fire is extinguished by smothering, thus shutting off the air supply. *Carbon dioxide, dry chemical and foam extinguishers are effective on this type of fire.*

Class "C"—Fires in live electrical equipment. This type of fire is extinguished by using a nonconducting agent. *A carbon dioxide extinguisher smothers the flame without damaging the equipment.* A dry chemical extinguisher is also effective. Whenever possible, the source of power to the burning equipment should be cut off.

Class "D"—This new and somewhat specialized classification includes fires in combustible metals such as magnesium, titanium, zirconium, sodium, potassium and others. A special extinguisher powder, unlike regular dry chemical and general purpose dry chemicals, may be applied with a scoop. Dry sand may also be used to extinguish small class "D" fires. Apply the dry chemical directly onto the burning area with a scoop. Completely cover the fire source.

The ability to locate an extinguisher is obviously important. Each fire extinguisher must be conspicuous and easy to reach. It should be hung in a place where there will be no damage from sources such as vehicles or chemical corrosion. Outdoors, the fire extinguisher should be protected from the weather. So that the extinguisher is easily removed, it should not be placed too high or too low.

Figure 5

Symbols for Classes of Fire Extinguishers

Symbol	Identification	Color
	Triangle containing the letter "A"	Green
	Square containing the letter "B"	Red
	Circle containing the letter "C"	Blue
	Five-pointed star containing the letter "D"	Yellow

Following are general rules respecting fire extinguishers and their use:

- Only reliable fire extinguishers meeting recognized standards and approved by a nationally recognized testing laboratory should be used.
- The correct type of fire extinguisher should be provided for each class of fire that may occur in a particular area.
- There should be sufficient extinguishers to afford protection against exposure in each area.
- Fire extinguishers should be located where they will be readily accessible for immediate use.
- Fire extinguishers should be regularly inspected and properly maintained. They should be recharged as required and be suitably marked for their appropriate use.
- Personnel should know the location of extinguishers and fire alarm boxes in their areas. They should be properly trained in steps to take during an emergency.
- PERSONNEL SHOULD BE TRAINED IN THE OPERATION AND PROPER USE OF FIRE EXTINGUISHERS. Training should emphasize that fire extinguishers are intended for combating incipient fires only.

Fire extinguishers should be inspected about once a month to ensure that they are readily accessible; fully charged; have no visible sign of damage, corrosion, plugged hoses, etc. All seals should be intact. They should be thoroughly examined annually and recharged, if necessary.

Fire Exits

The NFPA Life Safety Code (101) states that exits shall be arranged to provide free and unobstructed egress from all parts of a building. This means that exits *MUST* be unlocked. Areas around exit doors and passageways leading to and from the exit *MUST* be free of obstructions. The exit route *MUST* lead to a public way.

Emergency Action Plans and Procedures

An emergency action plan (EAP) is a written document required by particular OSHA standards. The purpose of an EAP is to facilitate and organize employer and employee actions during workplace emergencies. The elements of the plan must include, but are not limited to:

- Evacuation procedures and emergency escape route assignments.
- Procedures to be followed by employees who remain to operate critical plant operations before they evacuate.
- Procedures to account for all employees after an emergency evacuation has been completed.
- Rescue and medical duties for those employees who are to perform them.
- Means of reporting fires and other emergencies.
- Names or job titles of persons who can be contacted for further information or explanation of duties under the plan.

In most circumstances, immediate evacuation is the best policy, especially if professional firefighting services are available to respond quickly. There may be situations where employee firefighting is warranted to give other workers time to escape, or to prevent danger to others by spread of a fire. In this case, the employer is still required to have an EAP.

Fire Extinguishers' Relation to the EAP—Fight or Flee?

A fire is the most common type of emergency for which small businesses must plan. A critical decision when planning is whether or not employees should fight a small fire with a portable fire extinguisher or simply evacuate. Small fires can often be put out quickly by a well-trained employee with a portable fire extinguisher. However, to do this safely, the employee must understand the use and limitation of a portable fire extinguisher and the hazards associated with fighting fires. Evacuation plans that designate or require some or all of the employees to fight fires with portable fire extinguishers increase the level of complexity of the plan and the level of training that must be provided employees.

Using a Fire Extinguisher

The following steps should be followed when responding to incipient stage fire:

- Sound the fire alarm and call the fire department, if appropriate.
- Identify a safe evacuation path before approaching the fire. Do not allow the fire, heat or smoke to come between you and your evacuation path.

- Select the appropriate type of fire extinguisher.
- Discharge the extinguisher within its effective range using the P.A.S.S. technique (pull, aim, squeeze, sweep).
- Back away from an extinguished fire in case it flames up again.
- Evacuate immediately if the extinguisher is empty and the fire is not out.
- Evacuate immediately if the fire progresses beyond the incipient stage.

Most fire extinguishers operate using the following P.A.S.S. technique:

1. PULL: Pull the pin. This will also break the tamper seal.

2. AIM: Aim low, pointing the extinguisher nozzle (or its horn or hose) at the base of the fire.

   Note: Do not touch the plastic discharge horn on CO_2 extinguishers, it gets very cold and may damage skin.

3. SQUEEZE: Squeeze the handle to release the extinguishing agent.

4. SWEEP: Sweep from side to side at the base of the fire until it appears to be out. Watch the area. If the fire re-ignites, repeat steps 2–4.

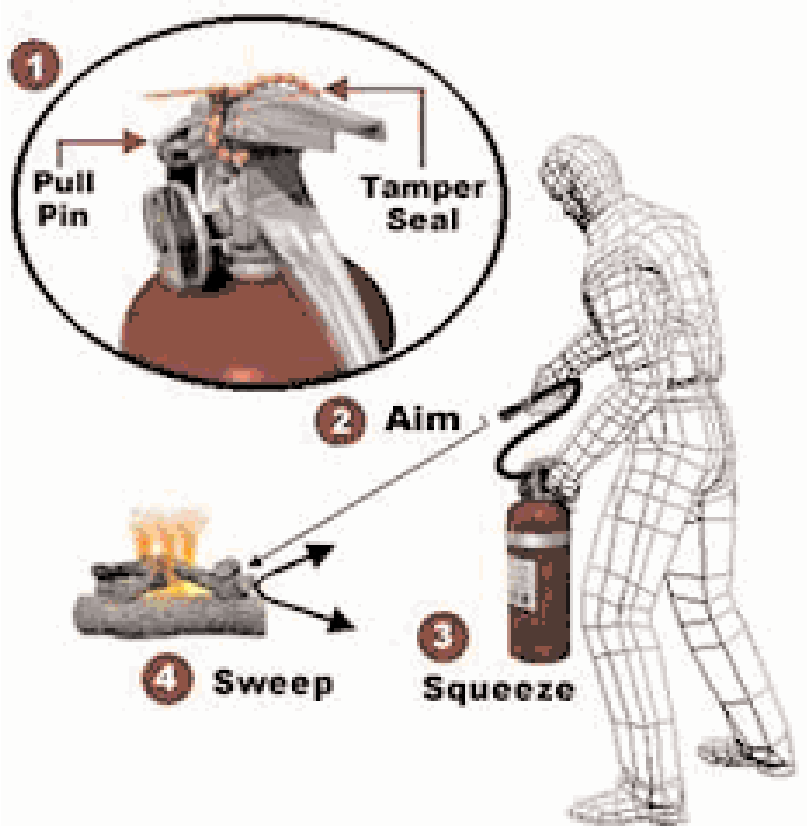

If you have the slightest doubt about your ability to fight a fire, EVACUATE IMMEDIATELY.

Reference: U.S. Department of Labor Occupational Safety and Health Administration, www.osha.gov, Evacuation Plans and Procedures etools

3

Hazards in Automobile and Woodworking Shops

School programs that offer hands-on learning experience in automobile shops (auto shops) and woodworking shops (wood shops) are valuable parts of school curricula. However, numerous hazards exist in these areas. This part addresses some of those hazards. A few minutes spent reviewing this section can sharpen your ability to recognize and eliminate hazards in your auto and wood shops.

Information About This Part

Included in this part is valuable information about machine safeguarding. Another helpful source on that subject is *A Guide to Machine Safeguarding,* OSHNC Industry Guide #3. That source is richly illustrated, includes a two-page checklist (which you can use to inspect your shops for safety hazards of various types), and includes an extensive bibliography. The school principal and teachers will also want to become familiar with *North Carolina Occupational Safety and Health Standards for General Industry,* Subpart O—Machinery and Machine Guarding. The standards are enforced in the public sector.

You can obtain a copy of Industry Guide #3 and the standards through the Bureau of Education, Training and Technical Assistance, Division of Occupational Safety and Health, N.C. Department of Labor (see the inside back cover of this publication for the address and telephone number).

Automobile Shops

The major sources of injury and illness in auto repair shops are:

- Improper use of tools
- Unguarded machinery
- Tripping and falling
- Electrical hazards
- Improper lifting
- Excessive exposure to auto exhaust gases, parts cleaners, paints, dust, etc.

People who work in auto shops may be exposed to dangerous amounts of gases, dusts and vapors. For example, carbon monoxide is a deadly gas. This gas can poison or kill a person in a matter of minutes. A 300 cubic inch internal combustion engine idling at 600 RPMs will give off about 100 cubic feet of exhaust gases per minute or enough to fill a closed 12' x 20' service bay in less than 30 minutes.

In addition to automobile exhaust fumes, some types of space heaters are a source of carbon monoxide. Complaints of headaches may well indicate that carbon monoxide levels are too high.

Very small garages might implement effective environmental controls by piping carbon monoxide directly to the outside, but larger garages require a mechanical ventilation system to remove automobile exhaust fumes. The ventilation system must be adequately designed and must be inspected regularly to make sure it is performing properly. The inspection should ensure that:

- The system is not blocked with paper, rags or other material.
- Fan belts have not slipped or broken.
- Hoses have not broken or split.

Asbestos dust is another potential hazard. Asbestos dust can cause lung cancer and asbestosis when inhaled. Those who repair automobile brakes most of the day or machine linings to fit the drums may be exposed to excess asbestos unless precautions are taken. Adequate ventilation must be provided, and respirators equipped with HEPA filters must be worn by all employees in the exposure area. Where respirators are worn, the requirements in 29 CFR 1910.134 must be followed. This standard includes, among other things, provisions for fit testing, medical surveillance, training and maintenance. Dust from the drums and floor should be vacuumed instead of swept or blown.

Woodworking Shops

Woodworking shops expose employees and students to dust and equipment hazards. These general safety rules will help prevent injuries in the wood shop:

- The workplace should be kept clean, orderly, sanitary, and, as far as possible, dry. Spills should be cleaned up promptly.
- Areas that are constantly wet should have nonslip surfaces where individuals normally walk or work.
- Every floor, working place and passageway should be kept free from protruding nails, splinters, holes and loose boards.

Dust Control

Most dust in a wood shop is removed by local exhaust systems. However, a considerable accumulation of very fine dust may settle on rafters and other structural members—especially in areas where sanding is done. This condition has great potential for fire and explosion. A flash fire over dust-covered surfaces maybe followed by explosions of ever increasing force. To protect against fires and explosions from this source, it is important to:

- Prevent dust accumulation outside of equipment by frequent vacuuming, cleaning and sweeping with soft push brooms.
- Control ignition sources.
- Always prohibit the blow-down of accumulated dust with compressed air.
- Provide fire protection (e.g., fire extinguishers, fire exits).

Machine Guarding

People cannot always be relied upon to act safely enough around moving machinery to avoid accidents. From time to time, individuals react differently to the same environment because of physical, mental or emotional changes—sometimes reacting safely, sometimes not. It follows that even the well-coordinated and highly trained individual may at times perform unsafe acts that could lead to injury and death.

Thus, machine guarding is one of the most important ways to protect employees and students. In fact, it could be said that the degree to which machines are guarded is a reflection of interest in providing a safe workshop.

In-running Nip Points

In-running nip points are a special danger existing only through action of rotating objects. Whenever machine parts rotate toward each other, or where one rotates toward a stationary object, an in-running nip point is formed. Objects or parts of the body may be drawn into this nip point and be bruised, crushed or severed.

The in-running side of rolling mills and calendars, of rolls used for bending, printing, corrugating, embossing or feeding and conveying stock, the in-running side of a chain and sprocket, belt and pulley, a gear rack, a gear and pinion, and a belt conveyor terminal are typical examples of nip point hazards (see figure 6).

Figure 6

Examples of In-running Nip Points

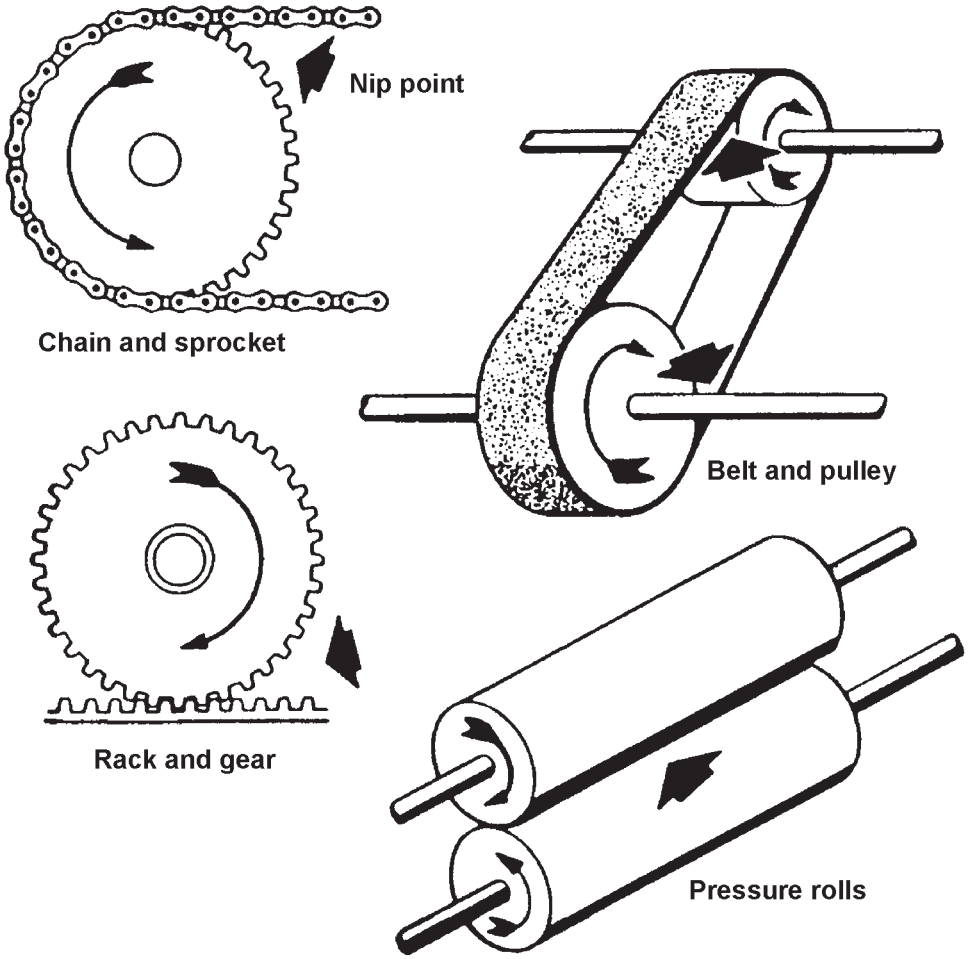

Cutting Action

Cutting action results when rotating, reciprocating or transverse motion is imparted by a tool. Danger from cutting action exists at the movable cutting edge of the machine as it approaches or comes in contact with the material being cut. Such action takes place at the point of operation in cutting wood, metal or other materials as differentiated from punching, shearing or bending by press action.

Typical examples of mechanisms involving cutting action include band and circular saws, mining machines, planing or shaping machines, turning machines, boring or drilling machines, and grinding machines (see figure 7).

Figure 7

Examples of Cutting Actions

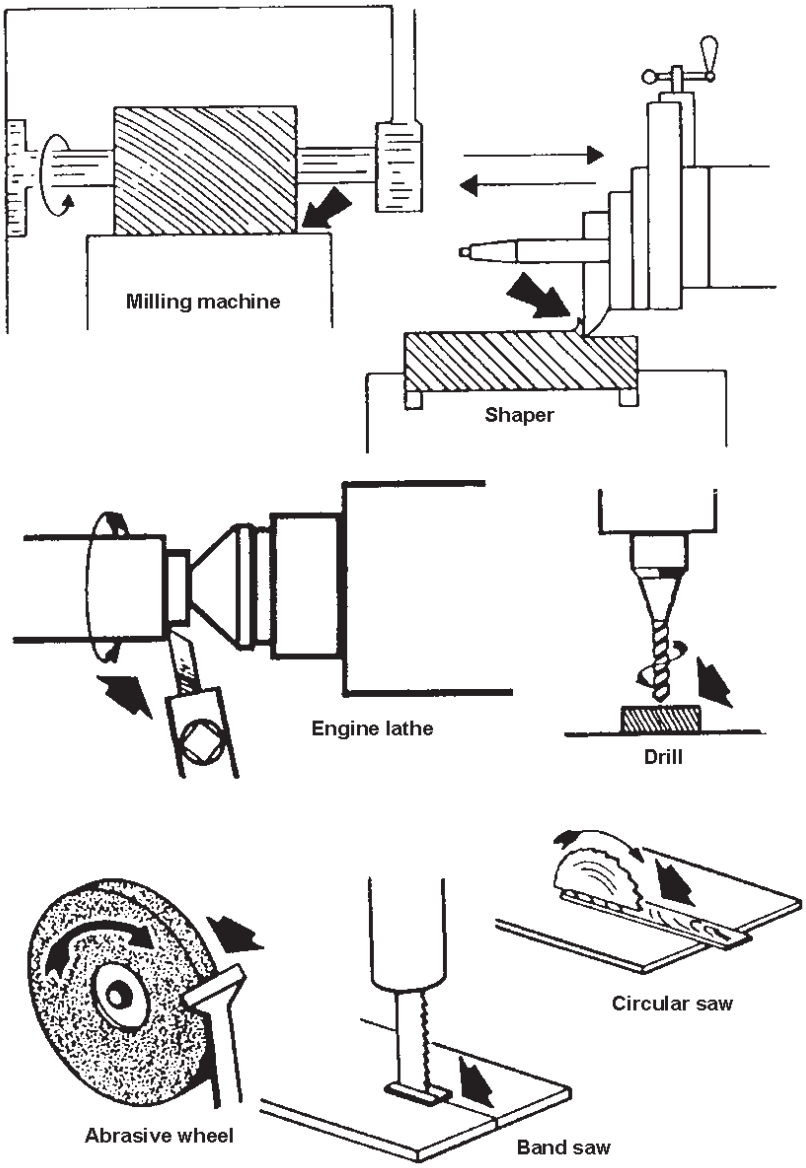

For information about proper methods of guarding much of the machinery depicted in figures 6 and 7, see *A Guide to Machine Safeguarding,* OSHNC Industry Guide #3.

General Requirements for Operating Equipment Safely

- **Stop Switch.** Every machine should have a stop switch within easy reach of the operator. Any machine requiring more than one operator must have a stop switch handy to each operator.
- **Master Switch.** Every machine should be provided with a means of locking out its energy source while repairs or adjustments are being made. A disconnect switch that can be locked in the off position is recommended.
- **Cutting Tools.** Cutting tools should be sharp. Dull tools tend to "grab" and create a hazardous condition.
- **Guards and Other Safety Devices.** Safe operation requires the proper guarding of all points of operation and other machine hazards.
- **Scrap and Waste.** The working surface of machinery must be kept clear of scrap material to prevent possible serious injuries should scrap come in contact with saw or cutter blades.

Appendix A

Physical Characteristics and Response Guidelines for Selected Flammable/Combustible Liquids

Liquid Name	CAS#	Mol. Formula	Mol. Weight	DOT Hazard Class	DOT ID#	IMO Class	NFPA Diamond			Boiling Point °F	Specific Gravity Water=1	Solubility
							H	F	R			
Acetone	67-64-1	C_3H_6O	58	Flammable Liquid	UN1090	3.1	1	3	0	133	0.79	Miscible
Acrylonitrile	107-13-1	C_3H_3N	53	Flammable Liquid	UN1093	3.2	4	3	2	171	0.81	Slight
Benzene	71-43-2	C_6H_6	78	Flammable Liquid	UN1114	3.2	2	3	0	176	0.88	Negligible
Butanol	71-36-3	$CH_3(CH_2)_3OH$	74	Flammable Liquid	NA1120	3.3	1	3	0	244	0.8	Slight
Carbon Disulfide	75-15-0	CS_2	76	Flammable Liquid, Poison	UN1131	3.1	2	3	0	115	1.27	Negligible
Ethyl Benzene	100-4l-4	$CH_3CH_2C_6H_5$	106	Flammable Liquid	UN1175	3.2	2	3	0	277	0.86	Negligible
Gasoline	8006-61-9	C_6H_{14}-C_7H_{16}-C_8H_1	100	Flammable Liquid	UN1203	3.1	1	3	0	102	<1	Insoluble
Heptane	142-82-5	$CH_3(CH_2)_5CH_3$	100	Flammable Liquid	UN1206	3.2	1	3	0	209	0.7	Negligible
Hexane	110-54-3	$CH_3(CH_2)_4CH_3$	86	Flammable Liquid	UN1208	3.1	1	3	0	156	0.66	Insoluble
Isopropanol	67-63-0	$(CH_3)_2CHOH$	60	Flammable Liquid	UN1219	3.2	1	3	0	180	0.78	Miscible
Isopropyl Ether	108-20-3	$(CH_3)_2C_2HOH(CH_3)_2$	102	Flammable Liquid	UN1159	3.1	2	3	1	154	0.72	Negligible
Kerosene	8008-20-6	Varies	Varies	Combustible Liquid	UN1223	3.3	0	2	0	356–572	0.82	Insoluble
Methanol	67-56-1	CH_3OH	32	Flammable Liquid	UN1230	3.2	1	3	0	148	0.8	Miscible
Methyl Ethyl Ketone	78-93-3	C_4H_8O	72	Flammable Liquid	UN1193	3.2	1	3	0	175	0.81	Slight
Propane	74-98-6	$CH_3CH_2CH_3$	44	Flammable Gas	UN1978	2.1	1	4	0	–44	0.5	Insoluble
Propylene	115-07-1	CH_3CHCH_2	42	Flammable Gas	UN1077	2.1	1	4	1	–53	0.51	Slight
Styrene	100-42-5	$C_6H_5CHCH_2$	104	Flammable Liquid	UN2055	3.3	2	3	2	293	0.9	Slight
Toluene	108-88-3	$C_6H_5CH_3$	92	Flammable Liquid	UN1294	3.2	2	3	0	231	0.86	Negligible
Turpentine	8006-64-2	$C_{10}H_{16}$	136	Flammable Liquid	UN1299	3.3	1	3	0	302–356	0.86	Insoluble
Varsol (Mineral Spirits)	8030-30-6	Varies	Varies	Combustible Liquid	NA1993	3.3	0	2	0	310–405	0.79	Insoluble
Xylene	1330-20-7	$C_6H_4(CH_3)_2$	106	Flammable Liquid	UN1307	3.2	2	3	0	292	0.86	Insoluble
#2 Fuel Oil	NA	Varies	Varies	Combustible Liquid	NA1993	3.3	0	2	0	420	0.86	Insoluble

NA = Data not available

—Continued

Liquid Name	Vapor Density Air=1 at Boiling Pt	Vapor Pressure @ 20°C mm Hg	Evaporation Rate Butyl Acetate=1	Flash Point °F	Autoignition Temperature °F	Flammability Limits % in Air	NFPA Flamm Class	OSHA PEL PPM	OSHA STEL PPM	Odor Threshold PPM	Evacuation Distance	RQ Pounds
Acetone	2.0	180	6	0	869	2.2–13.0	IB	750	1000	20	NE	5000
Acrylonitrile	1.8	83	4.5	30	898	3.0–17.0	IB	2	ceiling 10 SKIN	20	NE	100
Benzene	2.7	75	5.1	12	928	1.4–7.1	IB	1	5	12	NE	10
Butanol	2.6	4.2	0.5	84	689	1.4–11.2	IC	ceiling 50	NE	11	NE	5000
Carbon Disulfide	2.6	300	22.6	–22	194	1.3–50.0	IB	4	12(SKIN)	<1	NE	100
Ethyl Benzene	3.7	7.1	<1	59	810	1.0–6.7	IB	100	125	140	NE	1000
Gasoline	3.0–4.0	40	10	–58	536–853	1.3–7.6	IB	300	500	NA	NE	NE
Heptane	3.5	40	NA	25	419	1.05–6.7	IB	400	500	50	NE	NE
Hexane	3	124	NA	–7	437	1.1–7.5	IB	50	NE	NA	NE	NE
Isopropanol	2.1	33	2.8	53	750	2.0–12.0	IB	400	500	45	NE	NE
Isopropyl Ether	3.5	119	NA	–18	830	1.4–7.9	IB	500	NE	NA	NE	NE
Kerosene	NA	NA	NA	100–150	444	0.7–5.0	II	NE	NE	NA	NE	NE
Methanol	1.1	97	5.9	52	725	6.7–36.0	IB	200	250	2000	NE	5000
Methyl Ethyl Ketone	2.5	70	5.7	16	959	2.0–10.0	IB	200	300	5	NE	5000
Propane	1.6	6536	Not Applicable	Not Applicable	842	2.2–9.5	Flammable Gas	1000	NE	20000	NE	NE
Propylene	1.5	NA	NA	Not Applicable	927	2.0–11.0	Flammable Gas	NE	NE	NA	NE	NE
Styrene	3.6	4.5	0.5	90	914	1.1–6.1	IC	50	100	NE	NE	1000
Toluene	3.1	22	2.2	40	896	1.3–7.1	IB	100	150	10	NE	1000
Turpentine	4.7	5	NA	95	488	0.8=Lower Limit	IC	100	NE	200	NE	NE
Varsol (Mineral Spirits)	4.9	3.1	0.1	140	440–500	0.7–6.0	II	NE	NE	30	NE	NE
Xylene	3.7	9	0.7	84	986	1.1–7.0	IC	100	150	10	NE	1000
#2 Fuel Oil	NA	NA	NA	100	494	NA	II	NE	NE	NA	NE	NE

NA = Data not available
NE = Not Established

1. CAS# = Chemical Abstracts Service Registry Number.
2. Molecular Formula = the formula stating the actual number of each kind of atom found in a molecule of the material.
3. Molecular Weight = the sum of the atomic weights of the atoms that constitute a single molecule of the material.
4. DOT Hazard Class = the hazard class the material falls into as defined by the Dept. of Transportation.
5. DOT ID # = the four digit number used to identify DOT hazardous materials.
6. IMO Class = the code number representing the hazard class the material falls into as defined by the International Maritime Organization.
7. NFPA Diamond = the National Fire Protection Association hazard ratings as defined by NFPA 704 and found in NFPA 325M.
8. Boiling Point = the temperature at which the vapor pressure of a liquid is equal to atmospheric pressure. Water boils and vaporizes at 212°F.
9. Specific Gravity = the ratio of the weight of a given volume of material at a given temperature to an equal volume of distilled water at the same temperature. The specific gravity of water = 1 gm/cm^3.
10. Solubility = the ability of a material (solute) to go into solution with another substance (solvent). Solubility decreases as the number of carbon atoms increases.
11. Vapor Density = the weight per unit volume of a pure vapor. Materials with a vapor density <1.0 will generally rise and those heavier than 1.0 will sink.
12. Vapor Pressure = the pressure at a given temperature that the liquid-vapor equilibrium is reached. Vapor pressure decreases as the number of carbon atoms increases.
13. Evaporation Rate = the rate at which the liquid is transformed to the gas phase at a temperature below its boiling point. The evaporation rate of butyl acetate is 1.0.
14. Flash Point = the minimum temperature at which a liquid or solid gives off sufficient vapor to form an ignitable vapor-air mixture near the surface of the liquid or solid.
15. Autoignition Temperature = the minimum temperature at which a flammable gas or vapor in air can ignite in the absence of a spark or flame.
16. Flammability Limits = the minimum and maximum concentrations of the vapor in air that will propagate flame.
17. NFPA Flammability Class = the class of flammable liquids as defined by the NFPA.
18. OSHA PEL= the 8 hour time weighted average permissible exposure limit as defined in 29 CFR 1910.1000.
19. OSH STEL = the 15 minute short term exposure limit as established by OSHA and defined in 29 CFR 1910.1000.
20. Odor Threshold = the minimum concentration in air that the odor of the material can be detected.
21. Evacuation Distance = the initial distance that should be evacuated upon accidental release of a material assuming there is no fire involved in the incident.
22. RQ = Reportable Quantity = the minimum amount of the material that upon release must be reported to the National Response Center.

The key to handling a hazardous chemical safely is to know its properties:

- Is it explosive or toxic?
- What kinds of clothing or equipment can protect responders from it?
- What should responders do if it's on fire?

During a chemical accident, there are always many questions to answer. The problem is that no one can remember the important details about each of the tens of thousands of different chemicals that are manufactured, stored and transported in countries like the United States.

Commonly Used Hazardous Chemicals

Hazardous chemical	Harmful effects
1,1,1-Trichloroethane	May cause mutations in cells; can irritate the skin and eyes and cause unconsciousness and death. High exposures may damage the liver and kidneys.
Acetone	Can irritate the skin, eyes, nose and throat. High concentrations can cause dizziness and loss of consciousness.
Aluminum oxide	Can irritate the eyes, nose and throat. Repeated high exposure can cause scarring of the lungs and shortness of breath.
Ammonia	Can irritate the lungs and burn the eyes and skin. Long-term exposure can cause irritation of the eyes, nose, mouth and throat.
Benzene	A cancer-causing agent that has been shown to cause leukemia. May also cause headaches and irritation of the eyes, nose and throat. High exposure can cause convulsions and death.
Ethylbenzene	Can irritate the eyes, nose and throat. Repeated contact can cause drying and scaling of skin and may cause liver damage. High concentrations may cause dizziness and loss of consciousness.
Ethylene glycol	Can irritate the eyes, nose or throat and cause nausea, vomiting and headaches. Repeated or high exposure levels can cause kidney damage or stones and brain damage. May cause birth defects.
Freon 113	May cause skin irritation and rashes as well as drowsiness.
Glycol ethers	Can irritate the eyes, nose and throat and may cause birth defects. Repeated or high exposure can cause kidney damage or stones. Brain damage also may occur.
Hydrochloric acid	Can irritate the lungs. High exposure can cause buildup of fluid in the lungs, which can cause death.
Lead	Can cause weakness and insomnia. Higher exposure can result in damage to the nervous and reproductive systems.
Methanol	Irritates the eyes, nose, mouth and throat and can cause liver damage.
Methyl ethyl ketone	Can cause dizziness, headaches, blurred vision and loss of consciousness. May cause birth defects.
Methyl isobutyl ketone	Irritates the skin, eyes, nose and throat and may cause dizziness, nausea, diarrhea and loss of consciousness. Long-term exposure may damage the liver and kidneys.
Phenol	Can irritate the mouth, nose, throat and eyes. Long-term exposure may damage the liver and kidneys and lead to genetic damage. May be a cancer risk. Major skin contact or inhaling it can cause death.
Sodium hydroxide	Breathing the dust or droplets can irritate and burn the lungs. Contact can cause severe skin burns.
Sulfuric acid	Can severely burn the skin and eyes. Repeated long-term exposure can cause bronchitis, shortness of breath and emphysema.
Tetrachloroethylene	A suspected human carcinogen that has caused liver cancer in animals. It may damage the liver and kidneys after low but repeated exposure. It can cause dizziness and loss of consciousness.
Xylene	Can irritate the eyes, nose and throat. High levels can cause loss of consciousness and death. It may damage fetuses. Repeated exposure may damage bone marrow and eyes and cause stomach problems.

Want to learn more?
For comprehensive summaries about most hazardous substances, see the *Agency for Toxic and Substances and Disease Registry's ToxFAQs* fact sheets: www.atsdr.cdc.gov.

Where should I look for general information on federal, state or other safety mandates with which my school system is expected to comply?

The following is a list of federal agencies and their most applicable regulations concerning safety in schools. For North Carolina, several state agencies are also listed to provide assistance or source of contact to obtain relevant information. This list is not to be considered comprehensive. Many of the regulations cited and any recent updates/changes can be found on the Internet at the agency's Web address, e.g., www.osha.gov or www.epa.gov. State-specific safety and health requirements can be found at these Web sites: www.nclabor.com; www.enr.state.nc.us; www.dhhs.state.nc.us.

- Asbestos Hazard Emergency Response Act (AHERA)—Environmental Protection Agency (EPA)
- N.C. Department of Health and Human Services, Health Hazards Control Unit. Telephone: (919) 733-0820. http://www.schs.state.nc.us/epi/asbestos/ahmp.html
- Code of Federal Regulations (CFR), Appendix C, Part 20, Title 10, United States Nuclear Regulatory Commission (NRC) exempt quantities
- 29 CFR, Part 1910 (pertinent sections), Occupational Safety and Health Administration (OSHA) Standards for General Industry:
  1910.133 Eyewear Standards
  1910.134 Respirator Standard
  1910 General Workplace Standards
  1910 Subpart Z, Toxic and Hazardous Substances Standards
  1910.1020 Access to Employee Exposure and Medical Records
  1910.1028 Benzene Standard
  1910.1030 Bloodborne Pathogens Standards
  1910.1048 Formaldehyde Standard
  1910.1200 Hazardous Communication Standard
  1910.1450 Occupational Exposure to Hazardous Chemicals in Laboratories
- Resource Conservation and Recovery Act (RCRA)—EPA
- Title III Emergency Planning and Right-to-Know Sections 301–304, 311–313—EPA
- Title IV—Superfund Amendments and Reauthorization Act (SERA) (indoor air quality)—EPA
- Toxic Substances Control Act (indoor air quality)—EPA

Appendix B

Basic Components of 29 CFR 1910.1450 Occupational Exposure to Hazardous Chemicals in Laboratories

(a) *Scope and application.*

(b) *Definitions.*

(c) *Permissible exposure limits.*

(d) *Employee exposure determination.* (1) Initial monitoring. The employer shall measure the employee's exposure to any substance regulated by a standard which requires monitoring if there is reason to believe that exposure levels for that substance routinely exceed the action level (or in the absence of an action level, the PEL).

(2) Periodic monitoring.

(e) *Chemical hygiene plan—General.* (1) Where hazardous chemicals as defined by this standard are used in the workplace, the employer shall develop and carry out the provisions of a written Chemical Hygiene Plan. …

(f) *Employee information and training.* (1) The employer shall provide employees with information and training to ensure that they are apprised of the hazards of chemicals present in their work area.

(2) Such information shall be provided at the time of an employee's initial assignment to a work area where hazardous chemicals are present and prior to assignments involving new exposure situations. The frequency of refresher information and training shall be determined by the employer.

(3) Employees shall be informed of:

(i) The contents of this standard and its appendices which shall be made available to employees;

(ii) The location and availability of the employer's Chemical Hygiene Plan;

(iii) The permissible exposure limits for OSHA regulated substances or recommended exposure limits for other hazardous chemicals where there is no applicable OSHA standard;

(iv) Signs and symptoms associated with exposures to hazardous chemicals used in the laboratory; and

(v) The location and availability of known reference material on the hazards, safe handling, storage and disposal of hazardous chemicals found in the laboratory including, but not limited to, Material Safety Data Sheets received from the chemical supplier.

(4) Training. (i) Employee training shall include:

(A) Methods and observations that may be used to detect the presence or release of a hazardous chemical (such as monitoring conducted by the employer, continuous monitoring devices, visual appearance or odor of hazardous chemicals when being released, etc.);

(B) The physical and health hazards of chemicals in the work area; and

(C) The measures employees can take to protect themselves from these hazards, including specific procedures the employer has implemented to protect employees from exposure to hazardous chemicals, such as appropriate work practices, emergency procedures, and personal protective equipment to be used.

(ii) The employee shall be trained on the applicable details of the employer's written Chemical Hygiene Plan.

(g) *Medical consultation and medical examinations.* (1) The employer shall provide all employees who work with hazardous chemicals an opportunity to receive medical attention. …

(h) *Hazard identification.* (1) With respect to labels and material safety data sheets: (i) Employers shall ensure that labels on incoming containers of hazardous chemicals are not removed or defaced.

(ii) Employers shall maintain any material safety data sheets that are received with incoming shipments of hazardous chemicals, and ensure that they are readily accessible to laboratory employees.

(i) *Use of respirators.* … Respirators shall be selected and used in accordance with the requirements of 29 CFR 1910.134.

(j) *Recordkeeping.* The employer shall establish and maintain for each employee an accurate record of any measurements taken to monitor employee exposures and any medical consultation and examinations including tests or written opinions required by this standard.

(k) *Dates.*

(1) *Appendices.*

Appendix A to § 1910.1450. National Research Council Recommendations Concerning Chemical Hygiene in Laboratories (non-mandatory).

Appendix B to § 1910.1450. References (non-mandatory). The following references are provided to assist the employer in the development of a Chemical Hygiene Plan.

Other Sources of Help

Asbestos Program
P.O. Box 72687
Raleigh, NC 27611
(919) 733-0820

Council of State Science Supervisors (CSSS), Science Education Safety, *Science and Safety, Making the Connection* (Web site: http://csss.enc.org)

Department of Health and Human Services, Centers for Disease Control and Prevention (CDC), Office of Health and Safety—Lab Safety, *Basic Chemical Safety* (Web site: http://www.cdc.gov/od/ohs/safety/basicchem.htm)

Duke Poison Control Center
1-800-672-1697 (24 hours/day)

National Fire Protection Association (NFPA)
Batterymarch Park, Quincy, MA 02269
(617) 770-3000

National Safety Council
444 North Michigan Avenue
Chicago, IL 60611
(312) 527-4800

N.C. Department of Labor
Division of Occupational Safety and Health
Bureau of Education, Training and Technical Assistance
1101 Mail Service Center
Raleigh, NC 27699-1101
(919) 807-2875

N.C. Industrial Commission
Safety Education Division
4339 Mail Service Center
Raleigh, NC 27699-4339
(919) 807-2603

N.C. Department of Public Instruction
Division of Science
6352 Mail Service Center
Raleigh, NC 27699-6352
(919) 807-3844

N.C. Department of Public Instruction (DPI), 301 N. Wilmington St., Raleigh, NC 27601, Phone: (919) 807-3300, http://www.dpi.state.nc.us/ or www.ncpublicshools.org. DPI Publications Search: 1998 Elementary Science Safety Guide Category: Science through, Publication Number: SC111

N.C. Department of Labor, Industry Guide #4. *A Guide to OSHA in North Carolina.* NCDOL. Raleigh, N.C.

N.C. Department of Labor, Industry Guide #1. *A Guide to Safety in Confined Spaces.* NCDOL. Raleigh, N.C.

N.C. Department of Labor, Industry Guide #3. *A Guide to Machine Safeguarding.* NCDOL. Raleigh, N.C.

N.C. Department of Public Instruction. *Safety First in Science Teaching.* 1988. Division of Science. Raleigh, N.C. (This publication has an extensive bibliography.)

Occupational Safety and Health Administration. 1976. *Beware of Machine Hazards.* OSHA Pamphlet 2281. Washington, D.C.

OR-OSHA Publication 2034 (12/2004), *Hazard Communication: A Safe Work Practice Guide* (Web site: http://www.cbs.state.or.us/external/osha/standards/pub.htm)

University of Maryland, Center for Environmental Science Chesapeake Biological Laboratory, *Hazard Communication: Understanding Labeling and Material Safety Data Sheets* (Web site: http://www.cbl.umces.edu/Resources/SafetyWeb/HazComHandout.html#stability)

University of North Dakota, Safety & Environmental Health, *Safety and Loss Control Manual, Chemical/Hazardous Material Safety Signs and Labels* (Web site: http://departments.und.edu/safety/manual/chemhaz/chem.html)

U.S. Department of Health, Education and Welfare. *Machine Guarding—Assessment of Need.* June 1975. HEW Publication No. 75-173. National Institute for Occupational Safety and Health. Cincinnati.

U.S. Department of Labor Occupational Safety and Health Administration, Evacuation Plans and Procedures etools, *Fire Extinguisher Use* (Web site: www.osha.gov)

2002 Science Chemicals Poster, Category: Science through, Publication Number: SC127

2002 Science Safety Signs, Category: Science through, Publication Number: SC128

2002 Goggles: It's the Law, Category: Science through, Publication Number: SC129

The following industry guides are available from the N.C. Department of Labor's Division of Occupational Safety and Health:

#1. A Guide to Safety in Confined Spaces

#2. A Guide to Procedures of the Safety and Health Review Board of North Carolina

#3. A Guide to Machine Safeguarding

#4. A Guide to OSHA in North Carolina

#5. A Guide for Persons Employed in Cotton Dust Environments

#6. A Guide to Lead Exposure in the Construction Industry

#7. A Guide to Bloodborne Pathogens in the Workplace

#8. A Guide to Voluntary Training and Training Requirements in OSHA Standards

#9. A Guide to Ergonomics

#10. A Guide to Farm Safety and Health

#11. A Guide to Radio Frequency Hazards With Electric Detonators

#12. A Guide to Forklift Operator Training

#13. A Guide to the Safe Storage of Explosive Materials

#14. A Guide to the OSHA Excavations Standard

#15. A Guide to Developing and Maintaining an Effective Hearing Conservation Program

#17. A Guide to Asbestos for Industry

#18. A Guide to Electrical Safety

#19. A Guide to Occupational Exposure to Wood, Wood Dust and Combustible Dust Hazards

#20. A Guide to Crane Safety

#21. A Guide to School Safety and Health

#23. A Guide to Working With Electricity

#25. A Guide to Personal Protective Equipment

#26. A Guide to Manual Materials Handling and Back Safety

#27. A Guide to the Control of Hazardous Energy (Lockout/Tagout)

#28. A Guide to Eye Wash and Safety Shower Facilities

#29. A Guide to Safety and Health in Feed and Grain Mills

#30. A Guide to Working With Corrosive Substances

#31. A Guide to Formaldehyde

#32. A Guide to Fall Prevention in Industry

#33. A Guide to Office Safety and Health

#34. A Guide to Safety and Health in the Poultry Industry

#35. A Guide to Preventing Heat Stress

#36. A Guide to the Safe Use of Escalators and Elevators

#37. A Guide to Boilers and Pressure Vessels

#38. A Guide to Safe Scaffolding

#39. A Guide to Safety in the Textile Industry

#40. A Guide to Emergency Action Planning

#41. A Guide to OSHA for Small Businesses in North Carolina

Occupational Safety and Health (OSH)
Sources of Information

You may call 1-800-NC-LABOR (1-800-625-2267) to reach any division of the N.C. Department of Labor; or visit the NCDOL home page on the World Wide Web, Internet Web site address: http://www.nclabor.com.

N.C. Division of Occupational Safety and Health

Mailing Address:
1101 Mail Service Center
Raleigh, NC 27699-1101

Physical Location:
111 Hillsborough St.
(Old Revenue Building, 3rd Floor)

Local Telephone: (919) 807-2900 Fax: (919) 807-2856

For information concerning education, training and interpretations of occupational safety and health standards contact:

Bureau of Education, Training and Technical Assistance

Mailing Address:
1101 Mail Service Center
Raleigh, NC 27699-1101

Physical Location:
111 Hillsborough St.
(Old Revenue Building, 4th Floor)

Telephone: (919) 807-2875 Fax: (919) 807-2876

For information concerning occupational safety and health consultative services and safety awards programs contact:

Bureau of Consultative Services

Mailing Address:
1101 Mail Service Center
Raleigh, NC 27699-1101

Physical Location:
111 Hillsborough St.
(Old Revenue Building, 3rd Floor)

Telephone: (919) 807-2899 Fax: (919) 807-2902

For information concerning migrant housing inspections and other related activities contact:

Agricultural Safety and Health Bureau

Mailing Address:
1101 Mail Service Center
Raleigh, NC 27699-1101

Physical Location:
111 Hillsborough St.
(Old Revenue Building, 2nd Floor)

Telephone: (919) 807-2923 Fax: (919) 807-2924

For information concerning occupational safety and health compliance contact:

Safety and Health Compliance District Offices

Raleigh District Office (313 Chapanoke Road, Raleigh, NC 27603)
Telephone: (919) 779-8570 Fax: (919) 662-4709

Asheville District Office (204 Charlotte Highway, Suite B, Asheville, NC 28803-8681)
Telephone: (828) 299-8232 Fax: (828) 299-8266

Charlotte District Office (901 Blairhill Road, Suite 200, Charlotte, NC 28217-1578)
Telephone: (704) 665-4341 Fax: (704) 665-4342

Winston-Salem District Office (4964 University Parkway, Suite 202, Winston-Salem, NC 27106-2800)
Telephone: (336) 776-4420 Fax: (336) 776-4422

Wilmington District Office (1200 N. 23rd St., Suite 205, Wilmington, NC 28405-1824)
Telephone: (910) 251-2678 Fax: (910) 251-2654

****To make an OSHA Complaint,* **OSH Complaint Desk:** (919) 807-2796***

For statistical information concerning program activities contact:

Planning, Statistics and Information Management

Mailing Address:
1101 Mail Service Center
Raleigh, NC 27699-1101

Physical Location:
111 Hillsborough St.
(Old Revenue Building, 2nd Floor)

Telephone: (919) 807-2950 Fax: (919) 807-2951

For information about books, periodicals, vertical files, videos, films, audio/slide sets and computer databases contact:

N.C. Department of Labor Library

Mailing Address:
1101 Mail Service Center
Raleigh, NC 27699-1101

Physical Location:
111 Hillsborough St.
(Old Revenue Building, 5th Floor)

Telephone: (919) 807-2848 Fax: (919) 807-2849

N.C. Department of Labor (Other than OSH)

1101 Mail Service Center
Raleigh, NC 27699-1101
Telephone: (919) 733-7166 Fax: (919) 733-6197